UltraDRY

O/M manual

PD 07/28/2023 - v 5.97
PN IOM-0001

Table of Contents

PART NUMBER AND DESCRIPTIONS 3-5
START UP REQUIREMENTS 6
REFRIGERANT PIPING GUIDELINES 7
CONTROLS DESCRIPTION 8-9
PRELIMINARY TROUBLESHOOTING 10
SEQUENCE OF OPERATIONS 11
WIRING AND ELECTRICAL 12
CONTROLLER NAVIGATION 13-21
WIRING DIAGRAMS 22-42
PLUMBING/PIPING DIAGRAM 43-44
OPTIONS WIRING DIAGRAMS 45-50
DAT/PROCESS BACNET POINTS LIST 51-52
OPTIONS WIRING DIAGRAMS (cont'd.) 53-62
ADVANCED TROUBLESHOOTING 63-79

SEE IOM-0035 O/M APPENDICES MANUAL FOR MORE INFORMATION ON INSTALLATION AND SET UP OF PERIPHERAL DEVICES

For more information on Airflow Monitoring, see IOM-0008 (AIR FLOW HOOD)
For more information on Powered Exhaust, see IOM-0006 (ECONOMIZER/POWERED EXHAUST)
For more information on ERV's, see IOM-0025 (MATED ERV)

Contact iAIRE At:

www.myiaire.com

Email: sales@myiaire.com
Phone: 844-348-9168

ultraDRY Part Numbering Scheme

Commercial Package / Splits

12C - 3 4 5 6 7 8 9 10 11 12 13 - 14

Type (1,2)

UD - Cooling Only
UG - with Gas Heat
UH - DX Cool w/H.W. Coils
UP - with Heat Pump
UW - WSHP

Fan (4)

L - Low/Std. Static
M - Med. Static
H - High Static
E - Extra High Static

Voltage (5)

G - 230 VAC 1Φ
H - 230VAC 3Φ
K - 460VAC 3Φ
L - 575VAC 3Φ

Control (6)

0 - No Controls
A - DAT w/ VAV Duct
B - DAT w/ VAV Bldg
C - Thermostat w/ VAV Duct
D - DAT Control
E - Process w/ VAV Duct
F - Process w/ VAV Bldg
H - Thermostat w/ VAV Bldg
P - Process Control
S - Space (ERV only)
T - Thermostat Control
U - Space w/ VAV Duct (ERV only)
V - Space w/ VAV Bldg (ERV only)

Electric & Gas Heat (7,8,9)

XXX - Electric (kW)
XXX - Gas (mBH)

Heat Stages (10)

A - No Controls
B - 1 Stage
C - 2 Stage
D - 3 Stage
E - 4 Stage
M - Modulating

Roof Top Units (3)

TC08	TC18	FC04	VQP72
TC09	TC21	FC05	VQP96
TC12	TC25	FC06	VQP120
TC14	TC29	FC07	VQP151
TC16	HC07	FC08	VQP181
TC17	HC08	FC09	VQP210
TC20	HC09	FC12	VQP240
TC24	HC11	FC14	VQP300
TC28	HC12	FC16	VQP360
TC30	HC14	FC20	
P70	HC17	FC24	
P75	HC20	FC28	
P90	HC24	FC30	
P100	HC28	GC04	
N75	HQP72	GC05	
N90	HQP96	GC06	
N105	HQP120	A30	
N120	HQP150	A35	
N130	HQP180	A40	
N150	HQP242	A50	
		A60	

Disconnect (11,12)

00 - No Disconnect
01 - 240V - 30A Fuse
02 - 240V - 60A Fuse
03 - 240V - 100A Fuse
04 - 240V - 150A Fuse
05 - 240V - 200A Fuse
06 - 240V - 300A Fuse
11 - 240V - 30A Switch
12 - 240V - 60A Switch
13 - 240V - 100A Switch
14 - 240V - 150A Switch
15 - 240V - 200A Switch
16 - 240V - 300A Switch
21 - 600V - 30A Fuse
22 - 600V - 60A Fuse
23 - 600V - 100A Fuse
24 - 600V - 150A Fuse
31 - 600V - 30A Switch
32 - 600V - 60A Switch
33 - 600V - 100A Switch
34 - 600V - 150A Switch

Comm. Split (3)

COOLING	HEAT PUMP
AZ07RA07*	AQ07RQ07*
AZ08RA08*	AQ08RQ08*
AZ12RA12*	AQ12RQ12*
AZ14RA14*	AQ16RQ16**
AD12RA12**	AQ25RQ25**
AD14RA14**	
AD16RA16**	
AD25RA25**	
AP25RA30**	
AP27RA30**	
AP30RA30**	
AP4039M**	
AP5039M**	
AP6039M**	
AP6539M*	
AP7039M**	
AP8039M**	
AP9039M**	
AP10039M**	

*one circuit
**two circuit

Configuration (13)

A - Down Supply / Down Return
B - Horizontal Supply / Down Return
C - Down Supply / Horizontal Return
D - Horizontal Supply / Horizontal Return

WTR SRC CONFIG ONLY

E - Top Discharge / Rear Return
F - Top Discharge / Front Return
G - Front DIscharge / Rear Return
H - Rear Discharge / Front Return
I - Right Discharge / Left Return
J - Back Discharge / Left Return
K -Left Discharge / Right Return

Res. Split (3)

COOLING	HEAT PUMP
AB36FB6	HC36FB6
AB48FB6	HC48FB6
AB60FB6	HC48FB6
AC36FB6	HC60FB6
AC42FB6	Z24FB6
AC48FB6	Z36FB6
AC60FB6	Z48FB6
Z24FB6	Z60FB6
Z36FB6	
Z48FB6	
Z60FB6	

Options (14)

0 - No Options
A - Ionization
B - Whole Unit (UG)
C - All Coils (UG)
D - Condenser Coil (UG)
E - ERV (See options pg.2)
F - MERV 13 2" Filter
G - 2 Pos. OA Damper
H - BACNet
J - Hinged Access Doors
K - DW w/ Poly Insulation
L - SS Drip Pan
M - SS Gas Heat Exchanger
N - Dirty Filter Switch
P - Service Outlet (non-pwr)
Q - Service Outlet (pwr)
R - Split Power Fuse Disc.
S - Split Power Switch Disc.
T - Smoke SA
U - Smoke RA
V - Low Ambient Bypass
W - Economizer
X - Intertwined Evap. Coil
Y - Start Up
1 - 365 Day Annual Timer
2 - SOLAR HVAC
3 - Condensate Flow Switch
4 - Airflow Monitoring
5 - Hail Guard
6 - Fixed Powered Exhaust
7 - Phase Monitor
8 - Modulating Powered Exhaust
9 - Crate

ERV Options (if ERV selected on page 1)

- 15 16 17 18

Wheel Diameter (15,16)
19 - 19”
25 - 25”
30 - 30”
36 - 36”
41 - 41”
46 - 46”
52 - 52”
58 - 58”
64 - 64”

Airflow Capability (17)
L - Low
H - High

Options (18)
0 - No Options
A - 2 Position Outside Air Damper
B - 2 Position Exhaust Air
C - Building Pressure
D - Outside Airflow Monitoring
H - Supply Air FIlter Status
J - Exhaust Air FIlter Status
K - Supply Air Blower Status
L - Exhaust Air Blower Status
M - With OA Blower
N - Sensible Wheel
P - Frost Protection

ultraDRY NUMBERING SCHEME INSTRUCTIONS

How to Translate ultraDRY Part Numbering Schemes

ultraDRY's part numbering scheme is composed of similar product identification, when compared to Carrier, in order to easily provide common options and features. By referencing the 2 character "type" in the beginning of each part number, it is easy to distinguish cooling only, gas heat, or heat pump models. A full list of Carrier unit model numbers is provided from by following the link in the web addresses listed above. Using the comparison below, an excerpt is provided from Carrier's technical guide to illustrate how a common unit can be traced from ultraDRY to Carrier.

Asterisk

All part numbers and part number references will use an asterisk, * , to designate all characters which do not apply to the part number for the information being provided in that section. Where an asterisk appears in the middle of a part number, the missing characters are irrelevent to the inormation being provided. Where the asterisk appears at the end of a part number, the remaining part number characters are irrelevent to the information being provided.

To determine the specific Carrier unit you need, see below for how to determine which Carrier manual you will need.

For more information about Carrier Commercial Split Units go to: **http://www.carrier.com/building-solutions/en/us/products/split-systems/split-systems/**

For more information about Carrier Commercial Units go to: **http://www.carrier.com/building-solutions/en/us/products/packaged-outdoor/outdoor-packaged-units/**

For more information about Carrier Residential Units go to: **http://www.carrier.com/homecomfort/en/us/products/heating-and-cooling/packaged-products/**

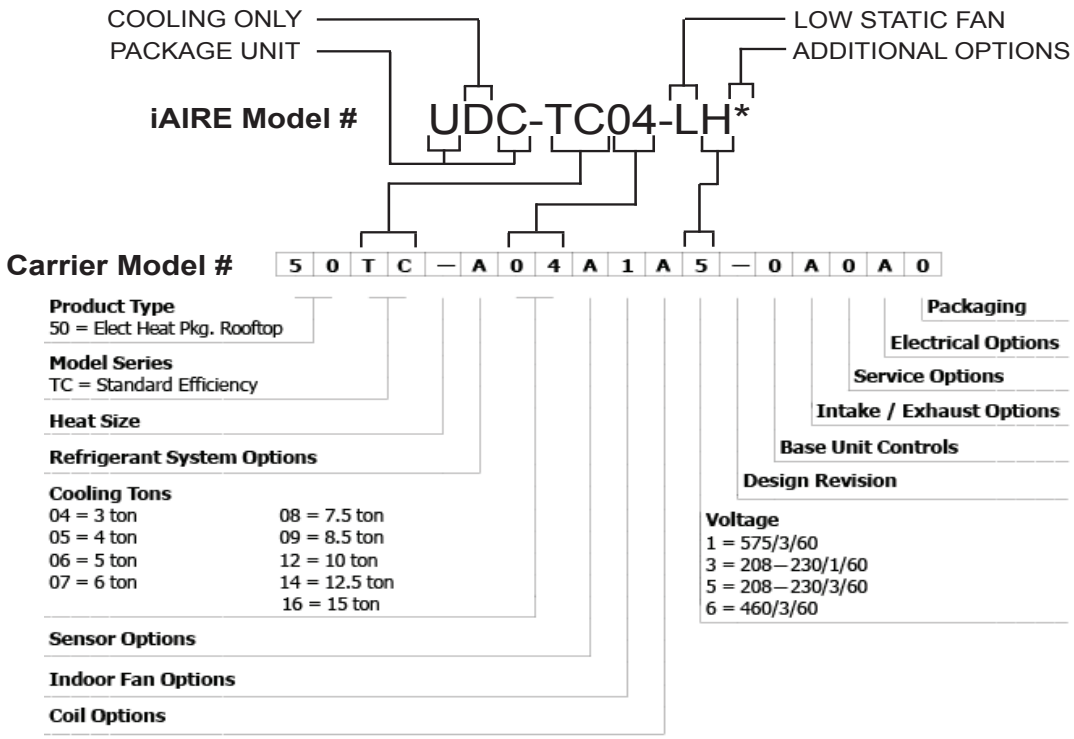

START-UP REQUIREMENTS
! IMPORTANT !

To maintain factory warranty, all units must have an authorized factory start-up and the start-up paperwork on file.

For Questions, Contact iAIRE At:

www.myiaire.com

Email: sales@myiaire.com
Phone: 844-348-9168

Fill out the Start-Up request form here:

https://www.myiaire.com/support-service/service-request/

REFRIGERANT PIPING GUIDELINES

IMPORTANT: The information below is intended for general information on refrigerant piping only. Reference specific AHU and condensing units manuals for specific piping details.

The design of a refrigerant piping system should:

Ensure proper refrigerant feed to evaporators; Provide practical refrigerant line sizes without excessive pressure drop; Prevent excessive amounts of lubricating oil from being trapped in any part of the system; Protect the compressor at all times from loss of lubricating oil; Prevent liquid refrigerant or oil slugs from entering the compressor during operating and idle time; and Maintain a clean and dry system.

REFRIGERANT LINE VELOCITIES

Economics, pressure drop, noise, and oil entrapment establish feasible design velocities in refrigerant lines. These are:
Suction line - 700 to 4,000 fpm
Discharge line - 500 to 3,500 fpm
Condenser drain line - 100 fpm or less
Liquid line - 125 to 450 fpm

Minimum Discharge- Line Velocities		
Refrigerant Velocity, fpm		
Nominal Pipe Size, in.	Riser	Horizontal
7/8	375	285
1-1/8	430	325
1-3/8	480	360
1-5/8	520	390
2-1/8	600	450

Higher gas velocities are sometimes found in relatively short suction lines on comfort air conditioning or other applications where the operating time is only 2,000 to 4,000 hrs per year and where the low initial cost of the system may be more significant than low operating cost.

Industrial or commercial refrigeration applications, where equipment runs almost continuously, should be designed with low refrigerant velocities for the most efficient compressor performance and low equipment operating cost.

The liquid line from the condenser to the receivers should be sized for 100 fpm or less to ensure positive gravity flow without incurring a backup of liquid flow. Liquid lines from the receivers to the evaporator should be sized to maintain velocities below 300 fpm, thus minimizing or preventing liquid hammer when solenoids or other electrically operated valves are used.

LINE SIZING

In sizing refrigerant lines, cost considerations favor keeping the line size as small as possible. However, suction and discharge line pressure drops cause loss of compressor capacity and increased power usage.

Excessive liquid line pressure drops can cause the liquid refrigerant to flash, resulting in faulty expansion valve operation. Refrigeration systems are designed so that friction pressure losses do not exceed a pressure differential equivalent to a corresponding change in the saturation boiling temperature.

The primary measure for determining pressure drop is a change in saturation temperature. Pressure drop in a refrigerant line causes a reduction in system efficiency. Correct sizing must be based on minimizing cost and maximizing efficiency.

Pressure drop calculations are determined as normal pressure loss associated with a change in saturation temperature of the refrigerant. Typically, the refrigeration system will be sized for pressure losses of 2°F differential or less for each segment of the discharge, suction, and liquid lines. An HFC refrigerant liquid line is sized for pressure losses of 1° differential or less.

IMPORTANT: The information above is intended for general information on refrigerant piping only. Reference specific AHU and condensing units manuals for specific piping details.

CONTROLS DESCRIPTIONS

DAT CONTROL

Designed to temper the air supplied to other HVAC equipment by supplying neutral air.

PROCESS / ERV SPACE CONTROL

Designed to condition the air to provide cooling or heating to the building space so only (1) piece of equipment is needed to both treat outside air and maintain space temperatures.

GENERAL INSTRUCTIONS

An iAIRE's operation is a function of the options and control packages that the iAIRE unit is equipped with.

RECEIVING / INSPECTION

Check part # of iAIRE unit to ensure it is what was ordered.

Verify voltage/phases match.

At the time of delivery the iAIRE unit should be visually inspected for possible damage. If any damage is found it should be reported immediately to the last courier company, preferably in writing. iAIRE recommends leaving the iAIRE unit in its shipping packaging until the time of installation.

RIGGING

Utilize the Carrier factory information on rigging these units. If you need help accessing this information, please contact iAIRE customer service at: sales@myiaire.com or 844-348-9168. ***Refer to IOM-0035 for ERV rigging.***

DAT & EAT SENSOR INSTALLATION INSTRUCTIONS

On iAIRE's Split Systems, the DAT & EAT sensors are not pre-installed in the unit. Both the DAT & EAT sensors need to be installed in the duct work.

Once the unit is installed, the EAT sensor should be placed in the outside air duct and in the outside air stream as shown in the diagram.

Once the unit (and heater if applicable) is installed, the DAT sensor should be placed at least 3-ft downstream of the discharge of the unit (and heater if applicable) as shown in the diagram.

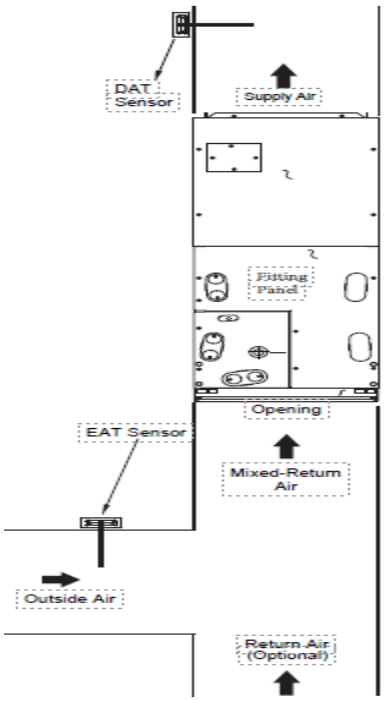

NOTE: Sensors and Wire Bundles are found on top of the unit.

SAFETY CONSIDERATIONS

Installation and servicing of the iAIRE units can be hazardous due to system, pressure, electrical components and moving parts. Only trained and qualified service personnel should install, repair or service these units.

When working on iAIRE or other HVAC units, observe precautions in the literature, tags and labels attached to the units, and any other safety precautions that may apply.

Follow all local, national and industry electrical codes when installing these units and accessories.

START-UP

PROCESS / DISCHARGE AIR TEMP CONTROL PACKAGE START-UP

Physical Inspection (pre power-up)

Check part # of iAIRE unit to ensure it is what was ordered.
Verify voltage/phases match.

1. Verify condition of unit and note any installation or shipping damage to coils or cabinets.

2. Verify installation of condensate drain trap.

3. Verify power is available at disconnect and fuses are installed if required. Check incoming power to make sure it is within tolerance.

4. Verify that all airways are open. (Fire dampers and supply air registers.)

5. Check blower belt tension. (if available)

6. Confirm that the space sensor is installed. (Space Control units only, see wiring in figure "B" on installatoin wiring diagram pages. Space Sensors must be wired using shielded wire.

After power-up

1. Check incoming 3-phase power for a stinger leg if voltage is 208/230VAC. If so ensure that stinger leg (high voltage phase to ground) is the center leg.

2. Go to iAIRE controller and set both the heat and cool CFM. The heat CFM is the VFD % in the heat mode that the AHU fan will run. The cool CFM is the VFD % the AHU fan will run in all other modes.

3. Remove panel from outside air section and verify outside air damper is fully open. Set adjustment thumbwheel on damper motor for full opening. Check crank arms and balljoints on damper mechanism allow damper to open fully.

Charging

1. Locate RCCD device in condenser section. Locate the RCCD Device and close the ball valve. This will stop flow to the RCCD Device

2. Disconnect 2-pin signal plug from Sporlan IB circuit board. This will close the modulating hot gas valve to allow correct charging.

3. Invert refrigerant jug to provide liquid charge into suction line and proceed to charge unit for 10 degrees of subcooling and 20 degrees superheat. Depending on ambient conditions, evaporator leaving air temperature should be between 48-58˚F.

4. When charge is complete return signal connector to Sporlan IB board and re-open RCCD ball valve.

5. Disconnect jumper from terminal strip input to allow the iAIRE controller to take over machine.

6. Adjust sensor setpoint to a low setpoint to bring all cooling stages on and check if hot gas line warms up.

TEST PROCEDURE

Verify operation as described above by monitoring liquid line temperature and observing motor speed.

Heater check

1. Verify Kw of installed electric heaters.

2. Disconnect white space temperature sensor wire from terminal strip. (This will make the iAIRE controller see a space temperature of -40 degrees and start heaters) There is a five minute delay at start of heat cycle. With heater running check amperage and verify discharge air temperature.

3. Return white space temperature sensor wire to terminal strip.

Checking and adjusting system refrigerant charge.

Before connecting gauges to the systems suction and discharge service ports, make the following adjustments.

1. Before running blower and compressors, close the manual ball valve on the discharge of the #1 compressor RCCD valve to eliminate Hot Gas Bypass during the charging process.

2. If Low Ambient is installed, shut off ball valve to low ambient and open bypass around low ambient to isolate L.A. valve.

3. Before running blower and compressors, put iAIRE controller in TEST mode and manually set Hot Gas Valve % to 0.0% to direct all refrigerant to DX cooling.

a) Connect gauges. (Pre-load evacuated split systems with nominal weight of refrigerant)

b) Enable FAN and then Cool Stage 1 in TEST mode and allow several minutes for system to stabilize.

c) Note, high pressure saturation Temperature on gauge and the temperature of the Liquid Line leaving the condenser. (Condensing temperature should be 100-110 degrees minimum)

d) Calculate Sub cooling (Saturation Temp – Liquid line Temp = Sub cooling)

e) Charge systems for 12-15 degrees of sub cooling. Add refrigerant if sub cooling is low and remove if high. With all cooling stages enabled system should deliver 55 degree air, or less depending on ambient conditions.

f) Record sub cooling temperature _____ degrees

g) With controller still in TEST mode, increase the Hot gas valve position in increments until discharge air, (DAT) is raised to 70 - 72 degrees.

h) Record sub cooling temperature _____ Record evap saturation temperature _____

i) Open RCCD valve.

j) If Low Ambient is installed, open valve to low ambient and close valve to bypass Low Ambient.

k) Record sub cooling temperature _____ Record evap saturation temperature _____

l) Note: You can leave the TEST menu and enter the STATUS menu to check system temperatures at any time. TEST mode will remain active until it is manually disabled.
m)When charging and checks are complete, disable the TEST mode and open the RCCD valve.

n) Allow system to stabilize and check sub cooling again.

o) Add/Remove refrigerant as necessary to maintain about 4 degree of sub cooling.

p) Remove gauges and replace service port covers.

q) If charging for the first time note all required conditions in startup sheets and record weight of all refrigerant added.

Record Keeping

1. Record all readings and conditions in startup sheets and add notes to call attention to any issues for the unit installing contractor to attend to.

2. Have the startup documents signed by supervising foreman for mechanical contractor.

MODULATING GAS SETUP:

1: SEE IOM-0035 for standard carrier heat
2: SEE IOM-0035 for High Heat Box.

PRELIMINARY TROUBLESHOOTING

1. The unit does not come on.
   a. Check to make sure there is power to the unit.
   b. Check to make sure the disconnect is on.
   c. Check to make sure the jumper between pins on terminal strip 1 is removed.
      i. If other wires are attached to pins, make sure there is not a short or the unit will not turn on. This is the location for remote start/stop.
   d. Check to make sure the circuit breaker or the 24V power supply is not tripped.

2. Fan speed is not correct.
   a. Go to the iAIRE controller and adjust the fan speed up or down as required.

3. The unit is tripping out on high heat and requires a manual reset.
   The air speed needs to be raised to prevent the heat from being too hot in the unit.

SEQUENCE OF OPERATIONS

DAT

In the UNOCCUPIED mode, the outside air unit will be off and the outside air damper, if supplied, will be closed. Occupied or Unoccupied is signaled to the IAIRE controller via a normally open or normally closed contact on the OCCUPIED input with a clock or switch. An open contact on the input indicates OCCUPIED, a closed contact indicates UNOCCUPIED.

In the OCCUPIED mode, the outside air damper will open and the supply fan will ramp up to the configured fan speed (dependent on whether the unit is heating or cooling). The Fan input is monitored to determine if fan is operating or not. If not operating, the IAIRE controller will enter into an alarm state, start staging off compressors, and attempt to cycle the fan until it starts.

There is a configurable EAT Heat Lockout (default 58F). If the entering air temperature (EAT) is < or = to the lockout, then the heat stages will cycle to maintain the discharge air temperature DAT setpoint.

There is a configurable EAT Cool Lockout (default 61F). If the EAT is > or = to this lockout than Y1 is always on and Y2-Y4 is staged on depending on demand (if enabled), along with the modulated hot gas valve will be used to maintain the DAT.

If the EAT is > the EAT Heat Lockout (default 58F) and < the EAT Cool Lockout (default 61F), Y1 will stage on and the modulated hot gas will maintain DAT unless DAT setpoint = EAT then free-cooling will engage and Y1 will be off. While in this mode, if discharge humidity is > 50% then Y1 will stage on and if its >70% then Y2 will stage on as well.

PROCESS / ERV SPACE

In the UNOCCUPIED mode, the outside air unit will be off and the outside air damper, if supplied, will be closed. Occupied or Unoccupied is signaled to the IAIRE controller via a normally open or normally closed contact on the OCCUPIED input with a clock or switch. An open contact on the input indicates OCCUPIED, a closed contact indicates UNOCCUPIED.

In the OCCUPIED mode, the outside air damper will open and the supply fan will start. When equipped with a Variable-Frequency Drive (VFD), the fan will ramp up to the configured fan speed (dependent on whether the unit is heating or cooling).). The Fan input is monitored to determine if fan is operating or not. If not operating, the IAIRE controller will enter into an alarm state, start staging off compressors, and attempt to cycle the fan until it starts.

There is a configurable EAT Heat Lockout (default 58F). If the EAT is < or = to this temperature, the electric heat stages will cycle to maintain the room air temperature setpoint.

There is a configurable EAT Cool Lockout (default 61F). If the EAT is > or = to this temperature than Y1 is always on and Y2-Y4 (if enabled) along with the modulated hot gas valve will be used to maintain the room air temperature.

If the EAT is > the EAT Heat Lockout (default 58F) and < the EAT Cool Lockout (default 61F) The modulated hot gas valve is used to maintain room air temperature (Y1 will turn on as necessary). While in this mode, if humidity is > 50% then Y1 will stage on and if humidity is > 70% then Y2 will stage on as well. Y2 will stage off, once on, if necessary to help maintain room air temperature.

SEQUENCE OF OPERATIONS NOTES

All forms of temperature control (PROCESS / ERV SPACE / DAT) can come with the ability to control the supply fan with VAV control.

VAV control can be set up for either duct static pressure control or building pressure control. In either of these cases, there is a min CFM setting to maintain minimum airflow to keep the evaporator coil from freezing and a max CFM setting to make sure you cannot run more air than the unit can heat or cool.

Duct static control tries to maintain a user set constant pressure in the discharge duct of the equipment.

Building static control tries to maintain a user set constant pressure in the building space.

WIRING AND ELECTRICAL

DAT default variables

EAT cool lockout	(61 degrees)
EAT heat lockout	(58 degrees)
DAT setpoint	(70 degrees)
EAT cool 2 lockout	(72 degrees)
LAT setpoint	(55 degrees) DX
EAH humidity lockout	(55% RH)

Process default variables

EAT cool lockout	(61 degrees)
Room setpoint	(60-80 degrees)
EAT cool 2 lockout	(72 degrees)
EAH humidity lockout	(55% RH)

NAVIGATING ON AN iAIRE CONTROLLER

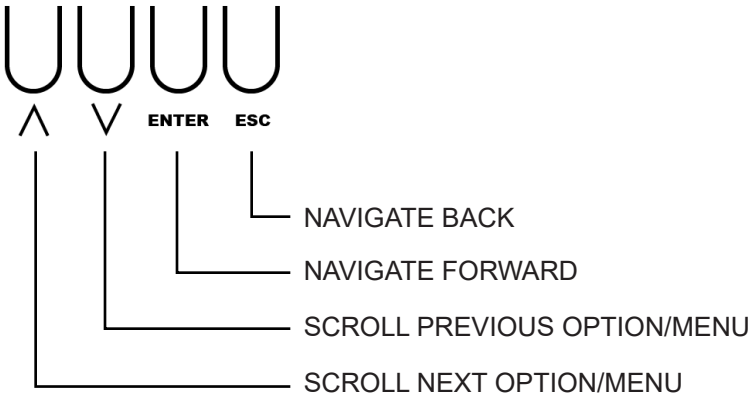

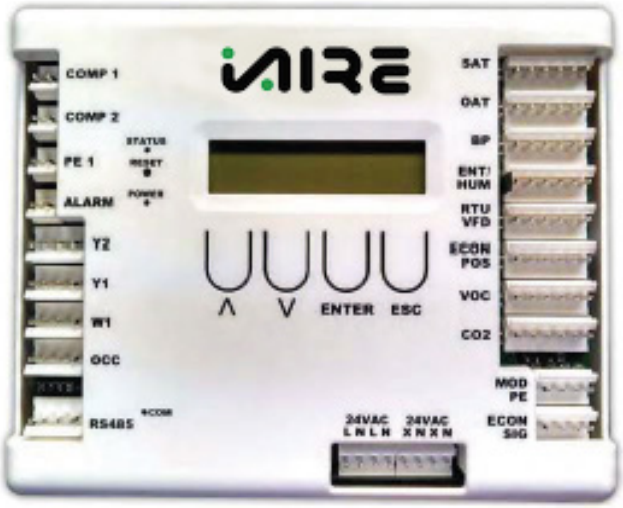

POWER ON THE CONTROLLER AND THE FIRST MENU IS **STATUS MENU**. TO NAVIGATE THROUGH THE OPTIONS, PRESS THE **UP ARROW** KEY. PRESS **ENTER** TO MAKE CHANGES IN ANY SUB MENU. TO GO BACK TO THE MAIN STATUS MENU, PRESS THE **ESC** BUTTON.

MENU SCREENS BEGIN ON THE FOLLOWING PAGE.

STATUS MENU

FAN STATUS

RANGE:
On/Off
NOTE: Supply Fan Status.

STARTUP STATUS

RANGE:
Started_Off
NOTE: Controller is enabled or disabled.

RANGE:
On/Off
NOTE: BAS Switch.

RANGE:
On/Off
NOTE: Test Mode.

ENTERING AIR TEMP STATUS

RANGE:
- 058 F_132 F
NOTE: View Entering (OA) Air Temp. Sensor failures register as -58F.

LEAVING AIR HUMIDITY

RANGE:
000_100
NOTE: DAT mode only.

ROOM AIR HUMIDITY STATUS

RANGE:
000_100
NOTE: View Room Humidity %.

ROOM SP AND TEMP STATUS

RANGE:
032 F_085 F
NOTE: View Room Temp Setpoint and Actual Temp.

DAT/LAT STATUS

RANGE:
- 058 F_132 F
NOTE: "Discharge Air Temp. of Unit / Leaving Air Temp. of Evaporator Sensor failures register as -58F."

DEHUMIDIFICATION STATUS

RANGE:
Disabled/Enabled
NOTE: Enabled because of Dehumidification call.

COOL MODE STATUS

RANGE:
Disabled/Enabled
NOTE: Enabled because of Cooling call.

HEAT MODE STATUS

RANGE:
Disabled/Enabled
NOTE: DAT mode only

HOT GAS STATUS

RANGE:
000_100
NOTE: View % of Modulating Hot Gas Reheat.

HEATING STAGES STATUS

RANGE:
W1 W2 W3
NOTE: View Number of Heating Stages called.

COOLING STAGES STATUS

RANGE:
Y1 Y2 Y3 Y4
NOTE: View Number of Cooling Stages called.

VAV STATUS MENU

DUCT PRESSURE

DEFAULT:
[enabled]
NOTE: Duct pressure 00.00 IN H2O. Fan speed (FAST) 100.

BULIDING PRESSURE

DEFAULT:
[enabled]
NOTE: Building pressure -00.50 IN H2O. Fan speed (FAST) 100.

TEST MODE MENU

HOT GAS TEST

RANGE: 0_100%
DEFAULT: 000
NOTE: Allows test of modulating gas reheat valves. Must have Cool 1 Test stage enable to create any reheat.

VFD SPEED TEST

RANGE: 0_100%
DEFAULT: 050
NOTE: Allows test of fan speed. Fan will not engage until Fan Test is Enabled.

COOL 1 TEST

RANGE: Enabled/Disabled
DEFAULT: N/A
NOTE: Turns on relay to turn Compressor 1 on.

FAN TEST

RANGE: Enabled/Disabled
DEFAULT: N/A
NOTE: Turns on supply fan contactor. Fan runs at VFD Speed Test %.

HEAT 1 TEST

RANGE: Enabled/Disabled
DEFAULT: N/A
NOTE: Turns on relay to turn W1 on.

HEAT 2 TEST

RANGE: Enabled/Disabled
DEFAULT: N/A
NOTE: Turns on relay to turn W2 on.

HEAT 3 TEST

RANGE: Enabled/Disabled
DEFAULT: N/A
NOTE: Turns on relay to turn W3 on.

COOL 2 TEST

RANGE: Enabled/Disabled
DEFAULT: N/A
NOTE: Turns on relay to turn Compressor 2 on.

COOL 3 TEST

RANGE: Enabled/Disabled
DEFAULT: N/A
NOTE: Turns on relay to turn Compressor 3 on.

COOL 4 TEST

RANGE: Enabled/Disabled
DEFAULT: N/A
NOTE: Turns on relay to turn Compressor 4 on.

MOD HEAT TEST

RANGE: 0_100%
DEFAULT: 000
NOTE: Allows test of modulating gas heat valve. Must have W1 Test stages enabled to create any heat.

DAMPER TEST

RANGE: 0_100%
DEFAULT: 000
NOTE: Allows test of damper air flow.

OA TEST

RANGE: 0_100%
DEFAULT: 000
NOTE: Allows test of outside air flow.

EA TEST

RANGE: 0_100%
DEFAULT: 000
NOTE: Allows test of exhaust air flow.

ERV WHEEL TEST

RANGE: On/Off
DEFAULT: N/A
NOTE:

SETPOINTS MENU

VFD SPEED COOL %

RANGE: 0_100% (100% = 60 Hz)
DEFAULT: 060

NOTE: Supply fan speed in cooling mode.

VFD SPEED HEAT %

RANGE: 0_100% (100% = 60 Hz)
DEFAULT: 050

NOTE: Supply fan speed in heating mode.

LOCKOUT DEADBAND

RANGE: 01 F_ 60 F | 30 F_ 31 F
DEFAULT: 03_58 F

NOTE: Deadband/HeatLOCK

HUMIDITY STAGE 1 SETPOINT %

RANGE: 000_100
DEFAULT: 050

NOTE: Space or DAT humidity in which unit will force Y1 on to dehumify in dead band.

HUMIDITY STAGE 2 SETPOINT %

RANGE: 000_100
DEFAULT: 055

NOTE: Space or DAT humidity in which unit will force Y2 on to dehumify in cooling mode or dead band.

EAT COOL LCKOUT

RANGE: 000 F_100 F
DEFAULT: 061 F

NOTE: Cooling Disabled until Outside Air Temp is at this setpoint or above. When enabled, Y1 is always on.

DAT SETPOINT

RANGE: 000 F_100 F
DEFAULT: 070 F

NOTE: (DAT MODE ONLY) Temperature unit is trying to control to when in Discharge air mode (DAT).

ROOM TEMP SETPOINT

RANGE:	**DEFAULT:**
1. N/A	1. SPACE MODE
2. [enabled]	2. Set Via I/O
3. N/A	3. Set Remotely
4. 60 F_90 F	4. User Interface

NOTE:
1. Temperature unit is trying to control to when in SPACE MODE.
2. When this is enabled, unit is getting room setpoint temperature for iAIRE provided space sensor.
3. When this is enabled, unit is getting room setpoint temperature from BAS system.
4. When this is enabled, unit is getting room setpoint temperature from iAIRE controller in unit.

LAT SETPOINT

RANGE: 39 F_ 58 F
DEFAULT: 55 F

NOTE: Temperature unit is trying to control leaving air temperature off of evaporator coil when LAT overide is enabled.

SET DUCT PRESSURE

RANGE: 0.00 _ 5.00 IN H_2O
DEFAULT: 1.00

NOTE: Allows the change in pressure inside the duct.

NOTE: Shown only when Duct Pressure [enabled] in VAV configurations menu.

SET BUILDING PRESSURE

RANGE: 0.00 _ 5.00 IN H_2O
DEFAULT: 1.00

NOTE: Allows the change in pressure inside the building.

NOTE: Shown only when Building Pressure [enabled] in VAV configurations menu.

CONFIGURATION MENUS

CONFIG HEAT AND COOL OFFSETS

OPTION: Cool Stage 2 On Offset
RANGE: -10F SP to +10F SP **DEFAULT:** +1F SP
NOTE: Allows user to set temp difference from setpoint that Y2 is enabled.

OPTION: Cool Stage 2 Off Offset
RANGE: -10F SP to +10F SP **DEFAULT:** -2F SP
NOTE: Allows user to set temp difference from setpoint that Y2 is disabled.

OPTION: Cool Stage 3 On Offset
RANGE: -10F SP to +10F SP **DEFAULT:** +3F SP
NOTE: Allows user to set temp difference from setpoint that Y3 is enabled.

OPTION: Cool Stage 3 Off Offset
RANGE: -10F SP to +10F SP **DEFAULT:** -1F SP
NOTE: Allows user to set temp difference from setpoint that Y3 is disabled.

OPTION: Cool Stage 4 On Offset
RANGE: -10F SP to +10F SP **DEFAULT:** +4F SP
NOTE: Allows user to set temp difference from setpoint that Y4 is enabled.

OPTION: Cool Stage 4 Off Offset
RANGE: -10F SP to +10F SP **DEFAULT:** 0F SP
NOTE: Allows user to set temp difference from setpoint that Y4 is disabled.

OPTION: Heat Stage 1 On Offset
RANGE: -10F SP to +10F SP **DEFAULT:** 0F SP
NOTE: Allows user to set temp difference from setpoint that W1 is enabled.

OPTION: Heat Stage 1 Off Offset
RANGE: -10F SP to +10F SP **DEFAULT:** +4F SP
NOTE: Allows user to set temp difference from setpoint that W1 is disabled.

OPTION: Heat Stage 2 On Offset
RANGE: -10F SP to +10F SP **DEFAULT:** -2F SP
NOTE: Allows user to set temp difference from setpoint that W2 is enabled.

OPTION: Heat Stage 2 Off Offset
RANGE: -10F SP to +10F SP **DEFAULT:** +2F SP
NOTE: Allows user to set temp difference from setpoint that W2 is disabled.

OPTION: Heat Stage 3 On Offset
RANGE: -10F SP to +10F SP **DEFAULT:** -3F SP
NOTE: Allows user to set temp difference from setpoint that W3 is enabled.

OPTION: Heat Stage 3 Off Offset
RANGE: -10F SP to +10F SP **DEFAULT:** +1F SP
NOTE: Allows user to set temp difference from setpoint that W3 is disabled.

OPTION: DeHumidify Off (Y1 Off) Offset
RANGE: -10F SP to +10F SP **DEFAULT:** Off 02F Below SP

CONFIG HEAT AND COOL TIMERS

OPTION: Cool 1 On Delay
RANGE: 000S _ 600S **DEFAULT:** 120S
NOTE: Allows user to set delay before Y1 comes on after controller deems Y1 is required.

OPTION: Cool 1 Off Delay
RANGE: 000S _ 600S **DEFAULT:** 060S
NOTE: Allows user to set delay before Y1 goes off after controller deems Y1 isn't required.

OPTION: Cool 2 On Delay
RANGE: 000S _ 600S **DEFAULT:** 120S
NOTE: Allows user to set delay before Y2 comes on after controller deems Y2 is required.

OPTION: Cool 2 Off Delay
RANGE: 000S _ 600S **DEFAULT:** 060S
NOTE: Allows user to set delay before Y2 goes off after controller deems Y2 isn't required.

OPTION: Cool 3 On Delay
RANGE: 000S _ 600S **DEFAULT:** 180S
NOTE: Allows user to set delay before Y3 comes on after controller deems Y3 is required.

OPTION: Cool 3 Off Delay
RANGE: 000S _ 600S **DEFAULT:** 030S
NOTE: Allows user to set delay before Y3 goes off after controller deems Y3 isn't required.

OPTION: Cool 4 On Delay
RANGE: 000S _ 600S **DEFAULT:** 180S
NOTE: Allows user to set delay before Y4 comes on after controller deems Y4 is required.

OPTION: Cool 4 Off Delay
RANGE: 000S _ 600S **DEFAULT:** 030S
NOTE: Allows user to set delay before Y4 goes off after controller deems Y4 isn't required.

OPTION: Heat 1 On Delay
RANGE: 000S _ 600S **DEFAULT:** 030S
NOTE: Allows user to set delay before W1 comes on after controller deems W1 is required.

OPTION: Heat 1 Off Delay
RANGE: 000S _ 600S **DEFAULT:** 005S
NOTE: Allows user to set delay before W1 goes off after controller deems W1 isn't required.

OPTION: Heat 2 On Delay
RANGE: 000S _ 600S **DEFAULT:** 005S
NOTE: Allows user to set delay before W2 comes on after controller deems W2 is required.

OPTION: Heat 2 Off Delay
RANGE: 000S _ 600S **DEFAULT:** 000S
NOTE: Allows user to set delay before W2 goes off after controller deems W2 isn't required.

OPTION: Heat 3 On Delay
RANGE: 000S _ 600S **DEFAULT:** 005S
NOTE: Allows user to set delay before W3 comes on after controller deems W3 is required.

OPTION: Heat 3 Off Delay
RANGE: 000S _ 600S **DEFAULT:** 000S
NOTE: Allows user to set delay before W3 goes off after controller deems W3 isn't required.

OPTION: Gas Max Delay
RANGE: 000S _ 600S **DEFAULT:** 300S

CONFIGURATION MENUS (cont.)

CONTROLLER MODE CONFIGURATION

OPTION: DAT MODE
RANGE: N/A **DEFAULT:** [enabled]
NOTE: Discharge Air Temp Controlled.

OPTION: SPACE MODE
RANGE: N/A **DEFAULT:** [disabled]
NOTE: 0-10vdc Space Sensor Controlled.

CONFIGURE # OF CONTROL BOARDS

OPTION: 1 CONTROL BOARD
RANGE: N/A **DEFAULT:** [enabled]
NOTE: Main Controller basic I/O.

OPTION: 2 CONTROL BOARDS
RANGE: N/A **DEFAULT:** [disabled]
NOTE: Accessory Controller additional I/O.

CONFIGURE # OF HEAT STAGES

OPTION: # of Heat Stages 1
RANGE: N/A **DEFAULT:** [enabled]
NOTE: Set number of heat stages in unit. If no heat stages select 1 stage.

OPTION: # of Heat Stages 2
RANGE: N/A **DEFAULT:** [disabled]
NOTE:

OPTION: # of Heat Stages 3
RANGE: N/A **DEFAULT:** [disabled]
NOTE:

MAX REHEAT REQUIREMENT

OPTION: Yes, Max Needed
RANGE: N/A **DEFAULT:** [enabled]
NOTE:

OPTION: No Max Needed
RANGE: N/A **DEFAULT:** [disabled]
NOTE: If No max is needed is selected, HGR valve will go from 0-100%.

CONFIGURE HEAT PUMP

OPTION: No Heat Pump
RANGE: N/A **DEFAULT:** [enabled]
NOTE: This is selected for even heat pump if the heat pump logic turns on Y1 & O on W1 command.

OPTION: Yes, Heat Pump
RANGE: N/A **DEFAULT:** [disabled]
NOTE: This is selected if the heat pump requires both Y1 & W1(O) signal to run.

LAT OVERRIDE

OPTION: LAT Override OFF
RANGE: N/A **DEFAULT:** [enabled]
NOTE: When enabled, forces the unit to run to try and maintain LAT temperature over other commands.

OPTION: LAT Override ON
RANGE: N/A **DEFAULT:** [disabled]
NOTE:

REHEAT MIN

RANGE: 001_100 **DEFAULT:** 002
NOTE: If Reheat min is set to 0%, the unit can vapor lock due to lack of fluid flow through reheat coil.

REHEAT MAX

RANGE: 001_100 **DEFAULT:** 075
NOTE: If Reheat max is more that 75%, many times the unit will loose ability to cool.

REHEAT MULTIPLIER

RANGE: .1_1 **DEFAULT:** .8
NOTE: % Modulating reheat signal = (((Act temp - setpoint temp)+ Reheat Offset)/Reheat Gain) * Reheat Multiplier.

REHEAT GAIN

RANGE: -20_20 **DEFAULT:** 03
NOTE: % Modulating reheat signal = (((Act temp - setpoint temp)+ Reheat Offset)/Reheat Gain) * Reheat Multiplier.

REHEAT OFFSET

RANGE: -10_10 **DEFAULT:** 01
NOTE: % Modulating reheat signal = (((Act temp - setpoint temp)+ Reheat Offset)/Reheat Gain) * Reheat Multiplier.

BAS CONFIG

OPTION: No BAS
RANGE: N/A **DEFAULT:** [enabled]
NOTE: Unit Operates as Standalone.

OPTION: Yes, BAS Active
RANGE: N/A **DEFAULT:** [disabled]
NOTE: Unit is Operated by Building Automation System.

FAN INPUT

OPTION: Fan is Enabled
RANGE: N/A **DEFAULT:** [selected]
NOTE: Unit has a feedback to ensure supply fan is on. If not unit will not run and go into alarm.

OPTION: Fan is Disabled
RANGE: N/A **DEFAULT:** N/A
NOTE: If this is selected, it ignores the feedback from fan and runs unit regardless of feedback.

COMM SETUP

OPTION: Cks Only
RANGE: N/A **DEFAULT:** [enabled]
NOTE: Default V.4+.

OPTION: Repeating
RANGE: N/A **DEFAULT:** [disabled]
NOTE: Used when V3 Main Board is replaced w/ V4 Board.

HUMIDITY MODE CONFIG

OPTION: 0-10V/0-100%
RANGE: N/A **DEFAULT:** [enabled]
NOTE:

OPTION: 0-10V/20-80%
RANGE: N/A **DEFAULT:** [disabled]
NOTE:

OPTION: User Defined
RANGE: N/A **DEFAULT:** [disabled]
NOTE: Allows user to set up different humidity sensors if required.

HUMIDITY LOW SP

RANGE: 001 _ 080 **DEFAULT:** 020
NOTE: USER DEFINED

CONFIGURATION MENUS cont.)

HUMIDITY HIGH SP

RANGE: 020 _ 100 **DEFAULT:** 080
NOTE: USER DEFINED

SUPPLEMENTAL HEAT

OPTION: No Supp Heat
RANGE: N/A **DEFAULT:** [enabled]
NOTE: Allows unit to bring on stages of heat if HGR does not have enough heat to get unit to Space or DAT set point temperature.

OPTION: W1 Supp. Heat
RANGE: N/A **DEFAULT:** [disabled]
NOTE: W1 will be supplemental heat.

OPTION: W2 Supp. Heat
RANGE: N/A **DEFAULT:** [disabled]
NOTE: W2 will be supplemental heat - This would be selected if unit has a heat pump since W1 is Y1 & O.

OPTION: W3 Supp. Heat
RANGE: N/A **DEFAULT:** [disabled]
NOTE: W3 will be supplemental heat.

HUM OVERRIDE ON DELAY

RANGE: 000S _ 600S **DEFAULT:** 180S
NOTE: When Y2 is called on because of humidity, this is the delay the unit will keep Y2 off before it turns on.

HUM OVERRIDE OFF DELAY

RANGE: 000S _ 600S **DEFAULT:** 120S
NOTE: When Y2 is on because of humidity and is no longer needed, this is the delay the unit will keep Y2 on before it shuts it off.

ALLOW HUM OFF OVERRIDE DELAY

RANGE: 000S _ 600S **DEFAULT:** 300S
NOTE: When Y2 is on because of humidity and the space temperature is below set point, this is the delay the unit will keep Y2 on before it shuts it off.

FREEZE PROTECTION

RANGE: Off < 33_45 F **DEFAULT:** 039
NOTE: On at 39 F.

FREEZE TIMER

RANGE: 000S_600S **DEFAULT:** 300S
NOTE: Freeze time 300 seconds.

WATER GUARD CONFIG

RANGE: Disabled/Enabled **DEFAULT:** Disabled
NOTE:

CONFIGURATION MENU (SPACE ONLY)

ROOM TEMP TYPE

OPTION: GreyStone
RANGE: N/A **DEFAULT:** [enabled]
NOTE: Allows user to select what type of space sensor is being used.

OPTION: User Defined
RANGE: N/A **DEFAULT:** [disabled]
NOTE: Allows user to create custom curve to utilize their own space sensor. Signal is 0-10V.

OPTION: Tongdy 32F-122F
RANGE: N/A **DEFAULT:** [disabled]
NOTE:

OPTION: Tongdy 32F-140F
RANGE: N/A **DEFAULT:** [disabled]
NOTE:

ROOM TEMP LOW

RANGE: -040 _ 080 **DEFAULT:** 032

ROOM TEMP HIGH

RANGE: 000 _ 140 **DEFAULT:** 095

ROOM SETPOINT SOURCE

OPTION: I/O
RANGE: 60 F_90 F **DEFAULT:** [enabled]
NOTE: When this is enabled, unit is getting room setpoint temperature for iAIRE provided space sensor.

OPTION: Remotely
RANGE: BAS Controlled **DEFAULT:** [disabled]
NOTE: When this is enabled, unit is getting room setpoint temperature from BAS system.

OPTION: User Interface
RANGE: 60 F_90 F **DEFAULT:** [enabled]
NOTE: When this is enabled, unit is getting room setpoint temperature from iAIRE controller in unit.

ROOM SETPOINT LOW

RANGE: 050 _ 082 **DEFAULT:** 062

ROOM SETPOINT HIGH

RANGE: 062 _ 130 **DEFAULT:** 082

CONFIGURATION MENUS (2 Control Boards Only)

MOD HEAT CONFIG

OPTION: Electric
RANGE: N/A **DEFAULT:** [enabled]
NOTE: This is selected if unit is all electric unit.

OPTION: Gas 1
RANGE: N/A **DEFAULT:** [disabled]
NOTE: This is selected if unit is a 1 stage gas heat unit or a unit with a high high heat unit.

OPTION: Gas 2
RANGE: N/A **DEFAULT:** [disabled]
NOTE: This is selected if the unit has a 2 stage gas heat unit.

CONFIGURE # OF COOLING STAGES

OPTION: 1
RANGE: N/A **DEFAULT:** [enabled]
NOTE: Select # of cooling stages the unit has.

OPTION: 2
RANGE: N/A **DEFAULT:** [disabled]
NOTE:

OPTION: 3
RANGE: N/A **DEFAULT:** [disabled]
NOTE:

OPTION: 4
RANGE: N/A **DEFAULT:** [disabled]
NOTE:

CONFIGURE HEAT TYPE

OPTION: Non-Mod Heat
RANGE: N/A **DEFAULT:** [enabled]
NOTE: Select if the unit has modulating heat or not.

OPTION: Mod Heat
RANGE: N/A **DEFAULT:** [disabled]
NOTE:

MODULATED HEAT MIN

RANGE: 000 _ 100 **DEFAULT:** 000
NOTE: Sets minimum % output from contoller to modulating heat valve.

MODULATED HEAT MAX

RANGE: 000 _ 100 **DEFAULT:** 100
NOTE: Sets minimum % output from contoller to modulating heat valve - This will limit max firing of heater.

MODULATED HEAT GAIN

RANGE: -20 _ 20 **DEFAULT:** 04
NOTE: % Modulating heat signal = (((Act temp - setpoint temp)+ Mod Heat Offset)/Moulated Heat Gain) * Mod Heat Multiplier.

MODULATED HEAT OFFSET

RANGE: -10 _ 10 **DEFAULT:** 00
NOTE: % Modulating heat signal = (((Act temp - setpoint temp)+ Mod Heat Offset)/Moulated Heat Gain) * Mod Heat Multiplier.

MODULATED HEAT MULTIPLIER

RANGE: .1 _ 1 **DEFAULT:** 1
NOTE: % Modulating heat signal = (((Act temp - setpoint temp)+ Mod Heat Offset)/Moulated Heat Gain) * Mod Heat Multiplier.

MOD HEAT WAIT TIME

RANGE: 000S_300S **DEFAULT:** 030S
NOTE:.

MOD HEAT DAT MAX

RANGE: 90F _ 130F **DEFAULT:** 110F
NOTE:

LAT AVERAGE

RANGE: ON/OFF **DEFAULT:** ON
NOTE:.

CONFIGURATION MENUS (Config VAV)

VAV MODE CONFIGURATION

OPTION: VAV mode off
RANGE: N/A **DEFAULT:** [enabled]
NOTE:

OPTION: Duct Pressure
RANGE: N/A **DEFAULT:** [disabled]
NOTE:

OPTION: Build. Pressure
RANGE: N/A **DEFAULT:** [disabled]
NOTE:

(if duct or build pressure is [enabled])

SET MIN FAN SPEED

RANGE: 000_100 **DEFAULT:** 40
NOTE:

SET MAX FAN SPEED

RANGE: 000_100 **DEFAULT:** 100
NOTE:

ADJUST FAST RATE

RANGE: 000_100 **DEFAULT:** 001
NOTE: X * 0.5 seconds

ADJUST SLOW RATE

RANGE: 000_050 **DEFAULT:** 005
NOTE: X * 0.5 seconds

SELECT SLOW POINT

RANGE: 000_100 **DEFAULT:** 013
NOTE:

SELECT TRANSDUCER TYPE

RANGE: 0in to +1in_-5in to 5in **DEFAULT:** 0in to +2in
NOTE:

SELECT DAMPER/ FAN CONTROL

OPTION: Fan Control
RANGE: N/A **DEFAULT:** [enabled]
NOTE:

OPTION: Damper Control
RANGE: N/A **DEFAULT:** [disabled]
NOTE:

CONFIGURATION MENUS (Config ERV)

ERV MODE CONFIGURATION

OPTION: ERV mode off
RANGE: N/A **DEFAULT:** [enabled]
NOTE:

OPTION: ERV mode
RANGE: N/A **DEFAULT:** [disabled]
NOTE:

(if ERV mode is [enabled])

SET OA FAN SPEED

RANGE: 000_100 **DEFAULT:** 50
NOTE:

SET EA FAN SPEED

RANGE: 000_100 **DEFAULT:** 50
NOTE:

SET DAMPER POSITION

RANGE: 000_100 **DEFAULT:** 100
NOTE:

SET ERV FREEZE TIME

RANGE: 060S_540S **DEFAULT:** 300S
NOTE:

ALARMS MENU

BAS COMM OK

RANGE: N/A **DEFAULT:** N/A

DIRTY FILTER

RANGE: N/A **DEFAULT:** N/A

FRZ1 SENSOR

RANGE: N/A **DEFAULT:** N/A

FRZ2 SENSOR OK

RANGE: N/A **DEFAULT:** N/A

NOTE: [Enabled] two stages of cooling.

FAN FAULT

RANGE: N/A **DEFAULT:** N/A

ACCESSORY BOARD MENUS

ACC V5.00NR1

NOTE: Addr [Changes based on "set address input"][CKS/FILTER]

SAVE ADDRESS

RANGE: 0_6 **DEFAULT:** 0

NOTE:

SET RX MODE

RANGE: N/A **DEFAULT:** N/A

NOTE: Options: Filter, CKS [Setting]

MISC CONTROLLER INFORMATION

- Solid red light indicates unit shutdown.
- Flashing red light indicates alarm with no unit shutdown.
- Mode 1: Cooling
- Mode 2: Heating
- Mode 3: Unit in free cooling

Accessory Board Addresses:

0: 1st main accessory board
2: ERV accessory board

3-PHASE RTU WIRING

SCH-0001-E

REVISION: V05.10

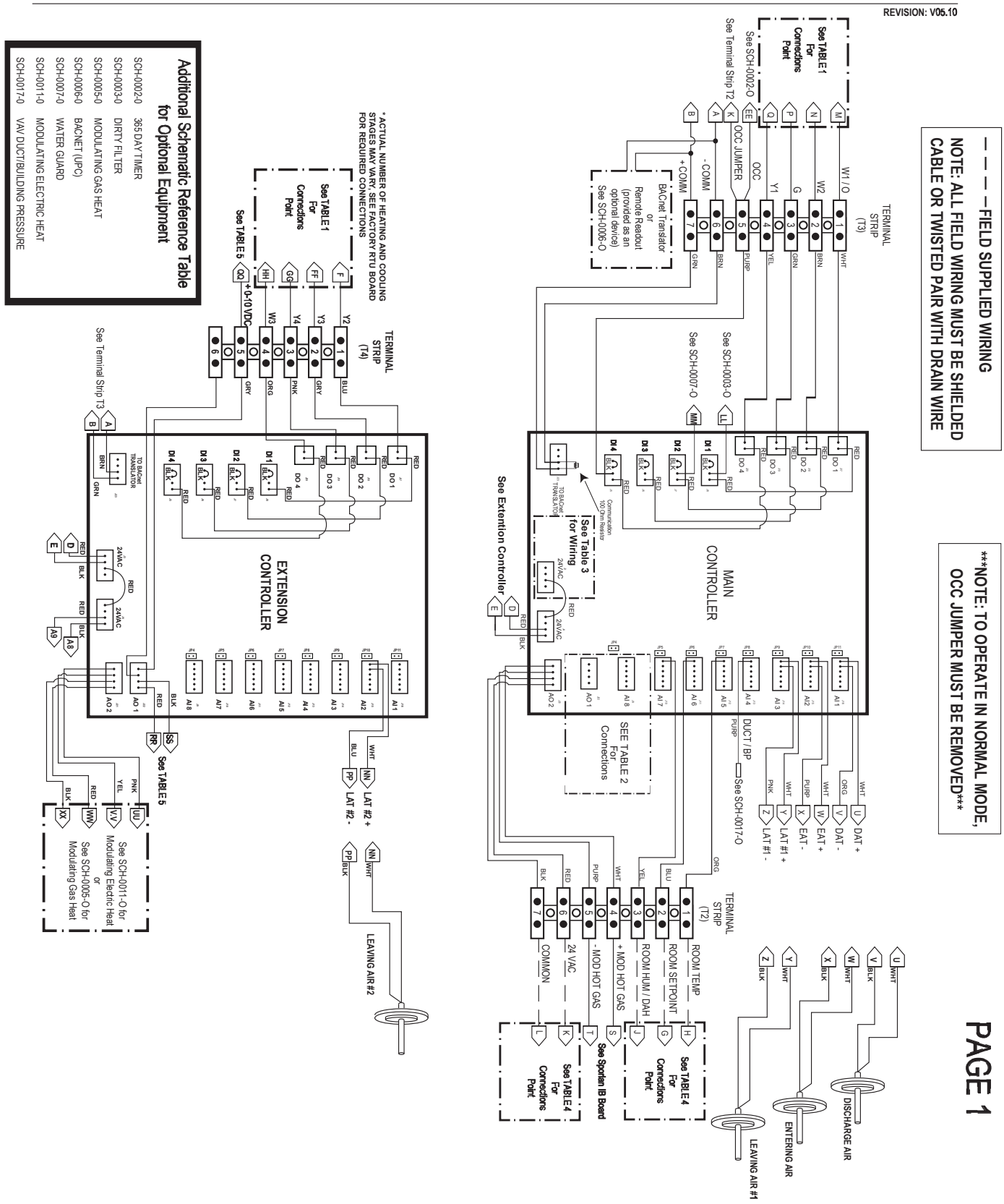

3 PHASE RTU WIRING

SCH-0001-E

REVISION: V05.10

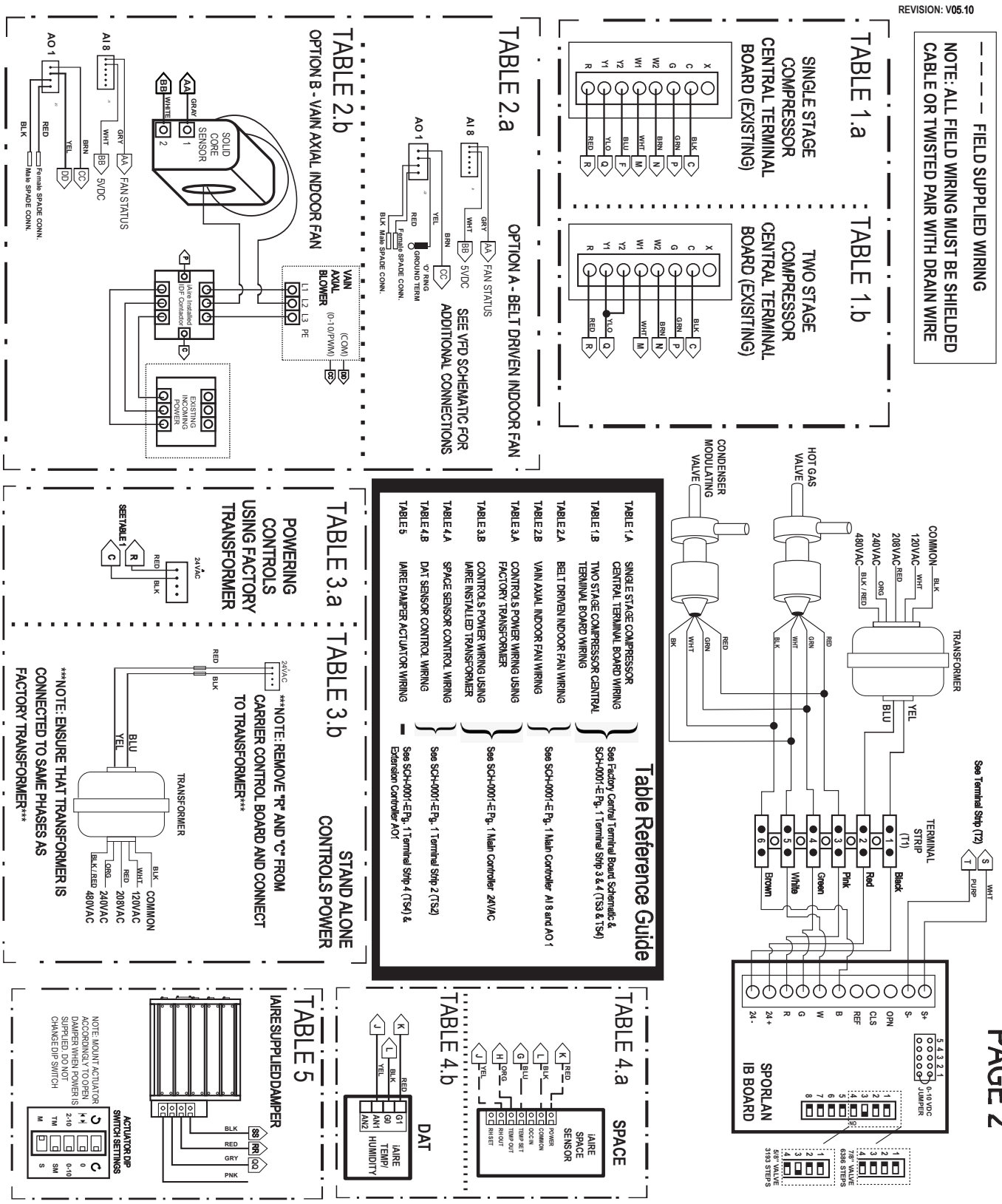

RTU (1 PHASE) WIRING

SCH-0002-E

USE FOR UNITS: 48/50TC, HC, & LC, P, A, & N
SCHEMATIC REFERENCE #: SCH-0014

REVISION: V05.06

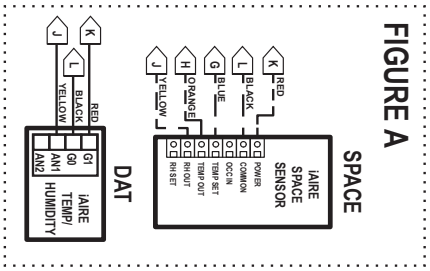

FOR UNITS OVER 7.5 TONS, LIQUID LINE SOLENOID IS RECOMMENDED AT THE EVAPORATOR

— — — — FIELD SUPPLIED WIRING

NOTE: ALL FIELD WIRING MUST BE SHIELDED CABLE OR TWISTED PAIR WITH DRAIN WIRE

EXTENSION CONTROLLER AND ALL ACCOMPANYING CONNECTIONS ARE ONLY REQUIRED WHERE THERE IS MORE THAN ONE STAGE OF COOLING, TWO STAGES OF HEAT, OR MODULATING HEAT.

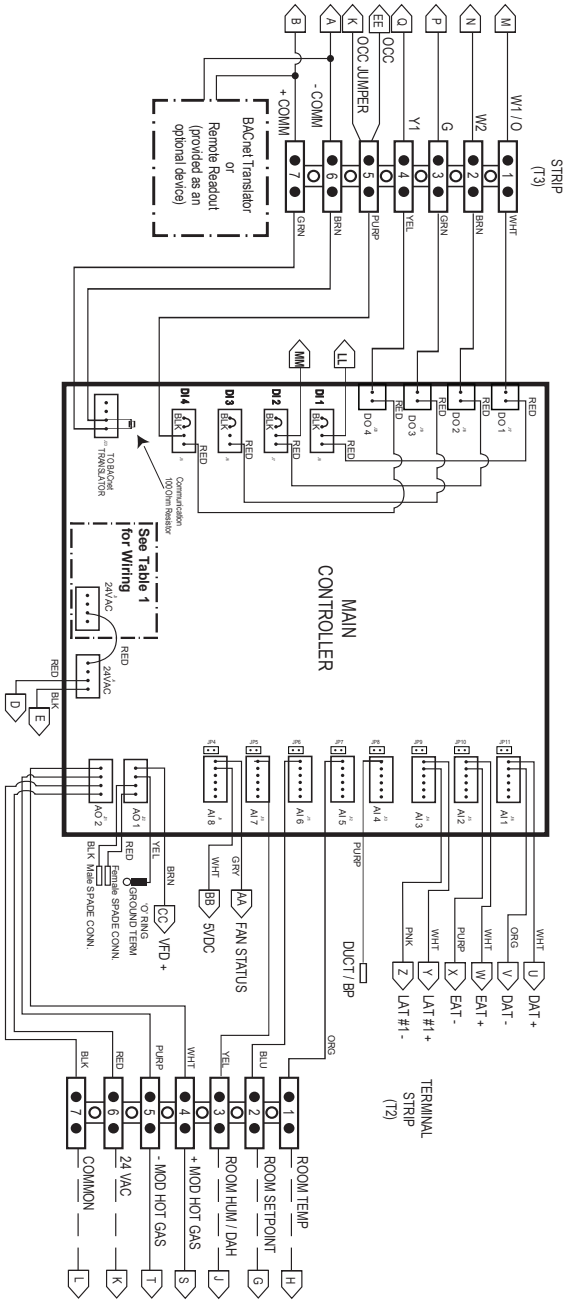

NOTE: TO OPERATE IN NORMAL MODE, OCC JUMPER MUST BE REMOVED*

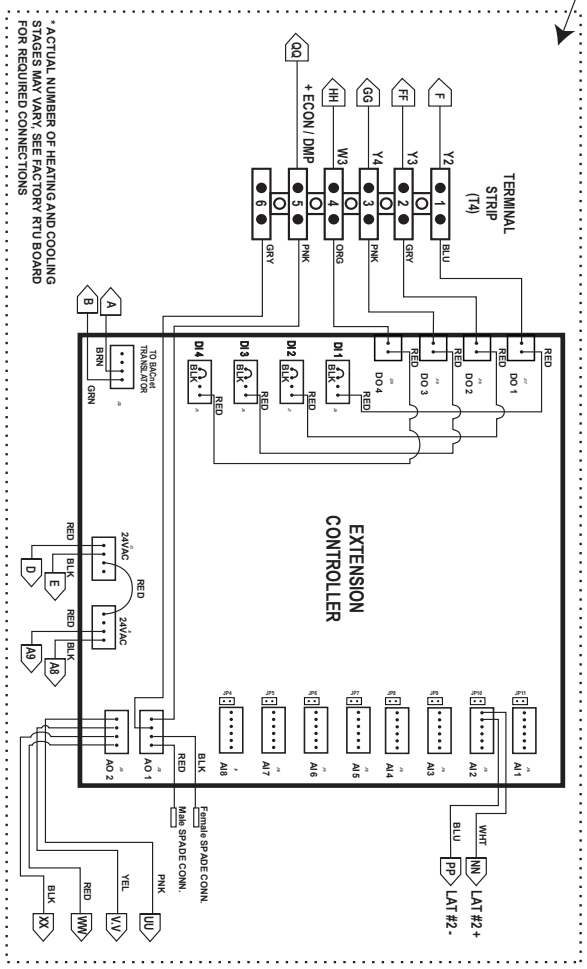

* ACTUAL NUMBER OF HEATING AND COOLING STAGES MAY VARY. SEE FACTORY RTU BOARD FOR REQUIRED CONNECTIONS

RTU (1 PHASE) WIRING

SCH-0002-E

USE FOR UNITS: 48/50TC, HC, & LC, P, A, & N
SCHEMATIC REFERENCE #: SCH-0014

REVISION: V05.06

— — — —FIELD SUPPLIED WIRING

NOTE: ALL FIELD WIRING MUST BE SHIELDED CABLE OR TWISTED PAIR WITH DRAIN WIRE

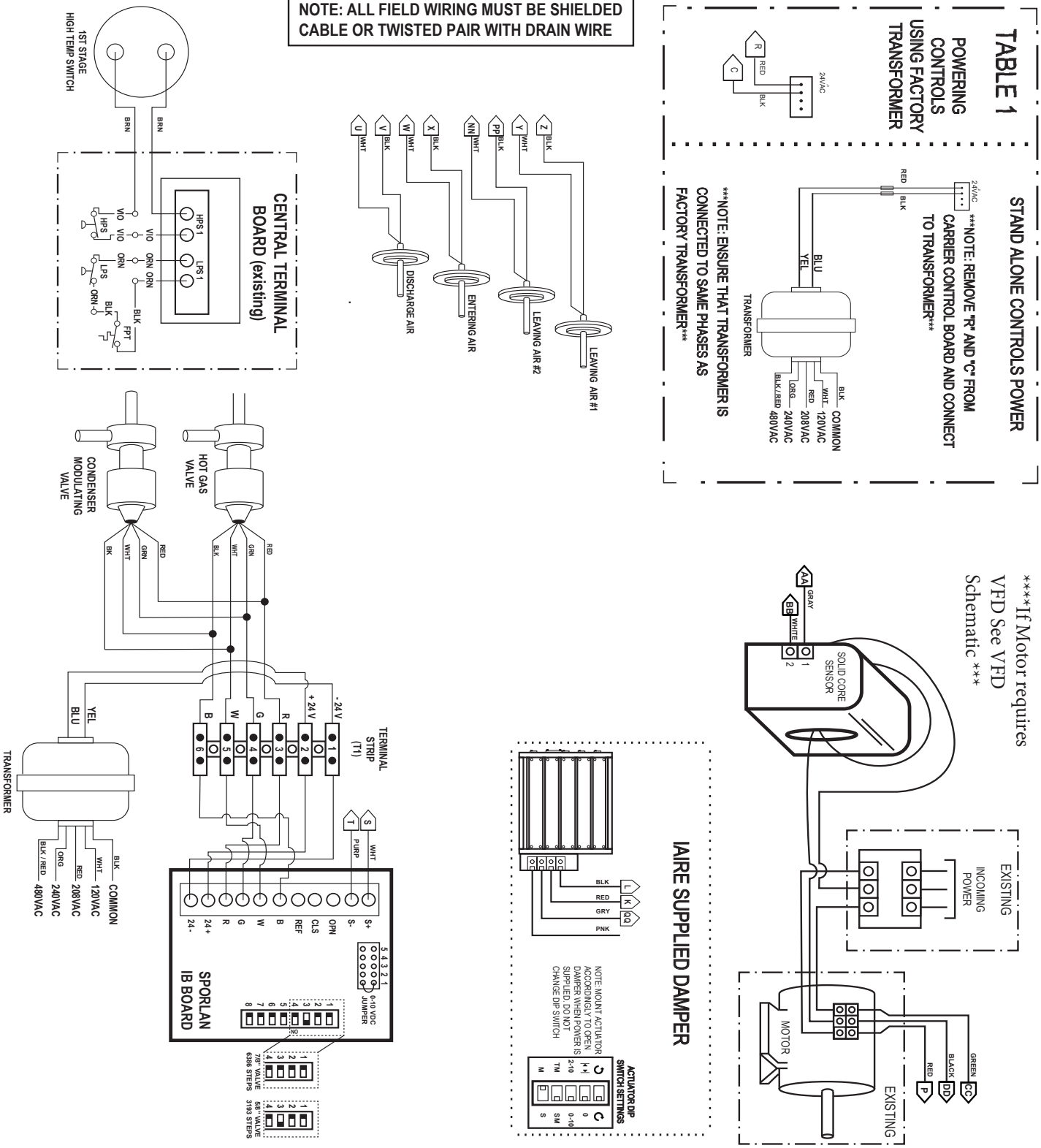

RESD. SPLIT WIRING

SCH-0004-E

USE FOR UNITS: 24ABB & FV4C
SCHEMATIC REFERENCE #: SCH-0003

REVISION: V05.09

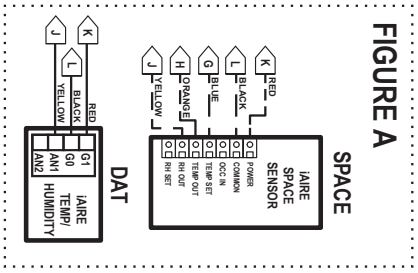

FOR UNITS OVER 7.5 TONS, LIQUID LINE SOLENOID IS RECOMMENDED AT THE EVAPORATOR

— — — — FIELD SUPPLIED WIRING

NOTE: ALL FIELD WIRING MUST BE SHIELDED CABLE OR TWISTED PAIR WITH DRAIN WIRE

EXTENSION CONTROLLER AND ALL ACCOMPANYING CONNECTIONS ARE ONLY REQUIRED WHERE THERE IS MORE THAN ONE STAGE OF COOLING, TWO STAGES OF HEAT, OR MODULATING HEAT.

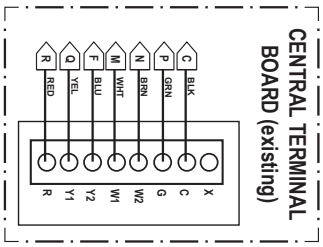

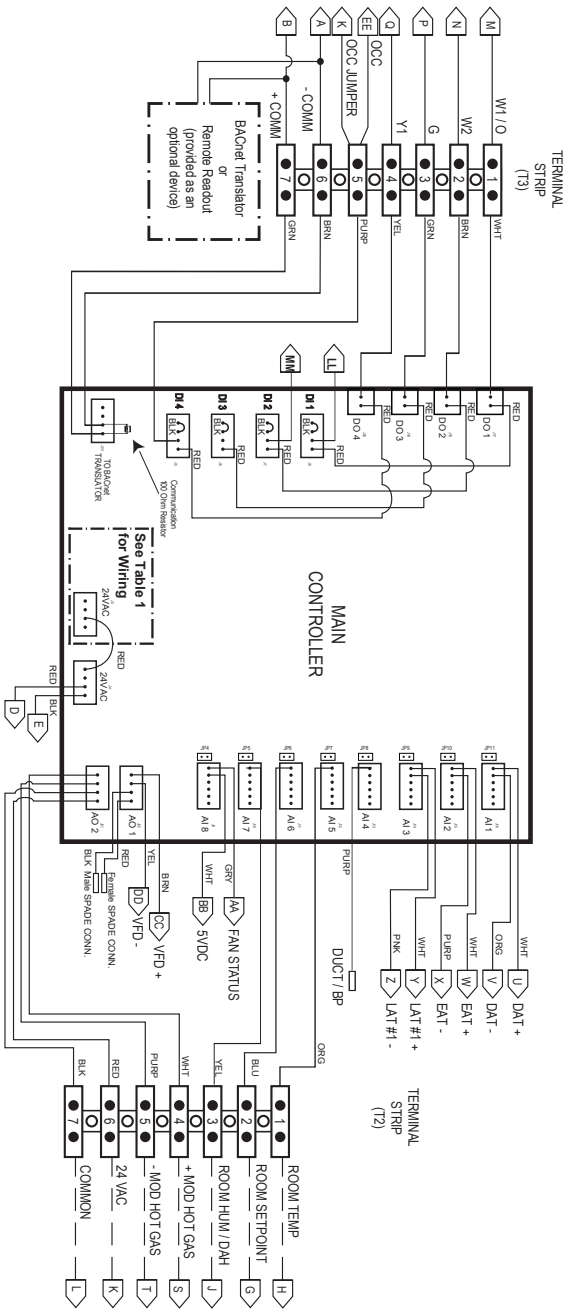

AIR HANDLER UNIT

NOTE: TO OPERATE IN NORMAL MODE, OCC JUMPER MUST BE REMOVED*

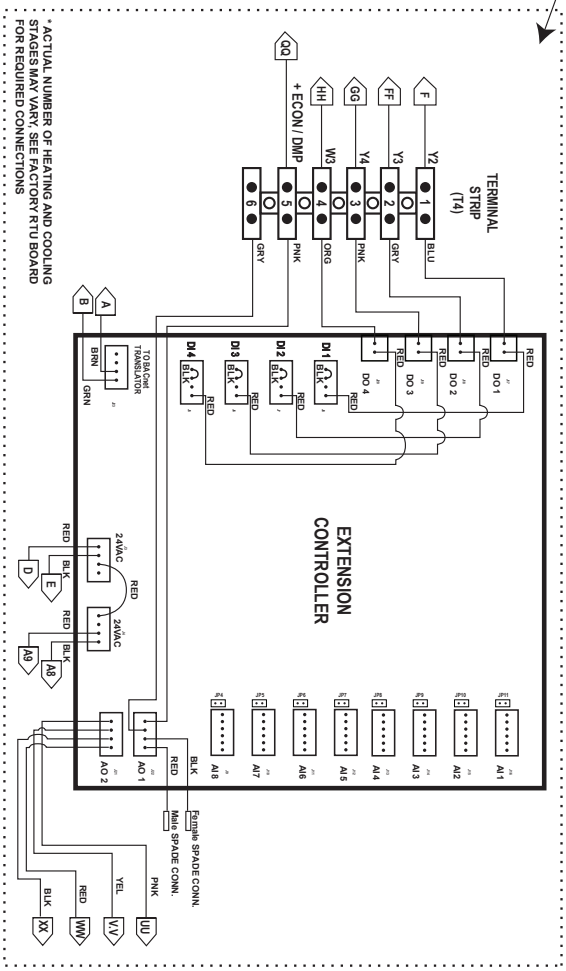

* ACTUAL NUMBER OF HEATING AND COOLING STAGES MAY VARY. SEE FACTORY RTU BOARD FOR REQUIRED CONNECTIONS

RESD. SPLIT WIRING

SCH-0004-E

USE FOR UNITS: 24ABB & FV4C
SCHEMATIC REFERENCE #: SCH-0003

REVISION: V05.09

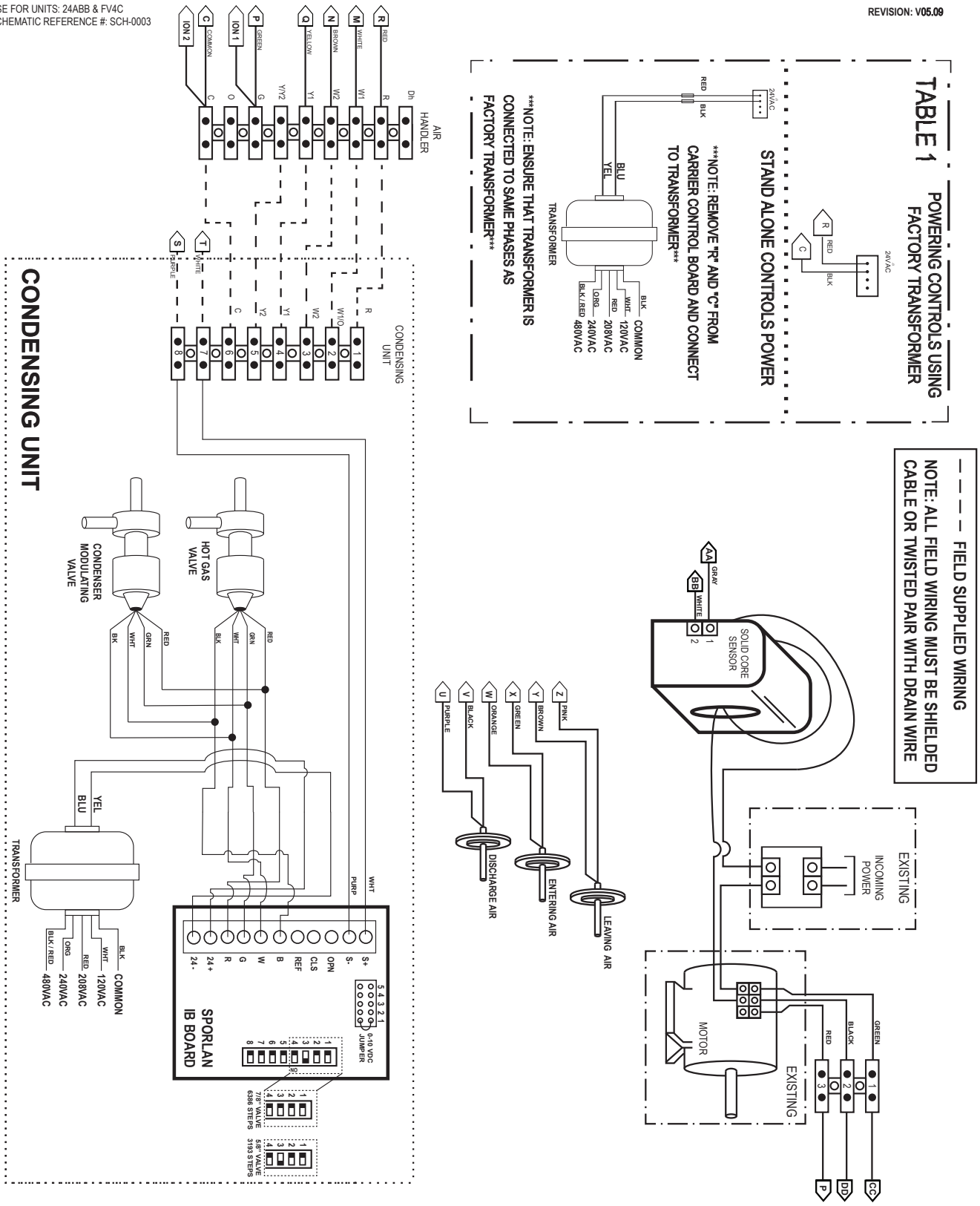

3-PHASE RTU WIRING

SCH-0006-E

REVISION: V05.07

FOR UNITS OVER 7.5 TONS, LIQUID LINE SOLENOID IS RECOMMENDED AT THE EVAPORATOR

— — — — FIELD SUPPLIED WIRING

NOTE: ALL FIELD WIRING MUST BE SHIELDED CABLE OR TWISTED PAIR WITH DRAIN WIRE

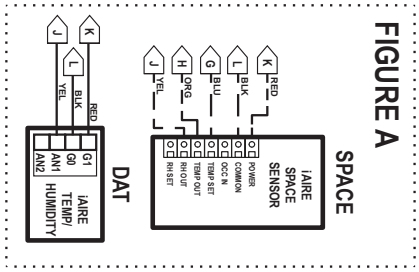

EXTENSION CONTROLLER AND ALL ACCOMPANYING CONNECTIONS ARE ONLY REQUIRED WHERE THERE IS MORE THAN ONE STAGE OF COOLING, TWO STAGES OF HEAT, OR MODULATING HEAT.

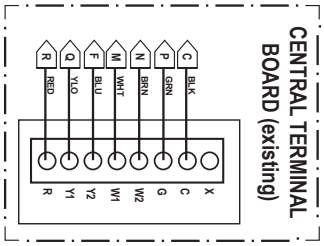

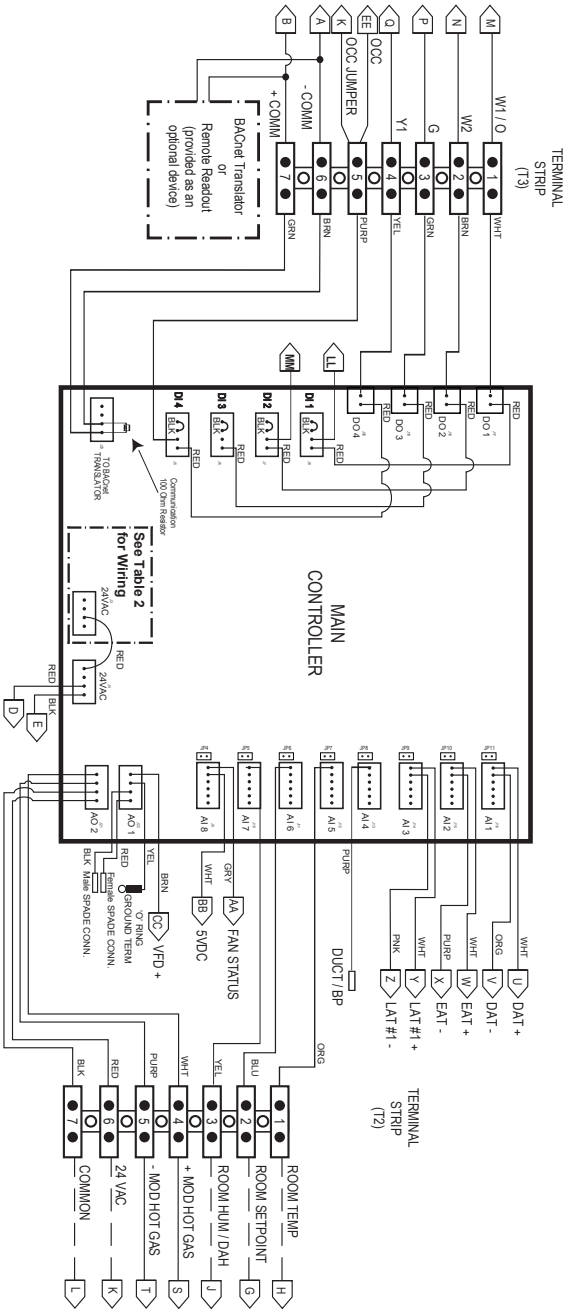

NOTE: TO OPERATE IN NORMAL MODE, OCC JUMPER MUST BE REMOVED*

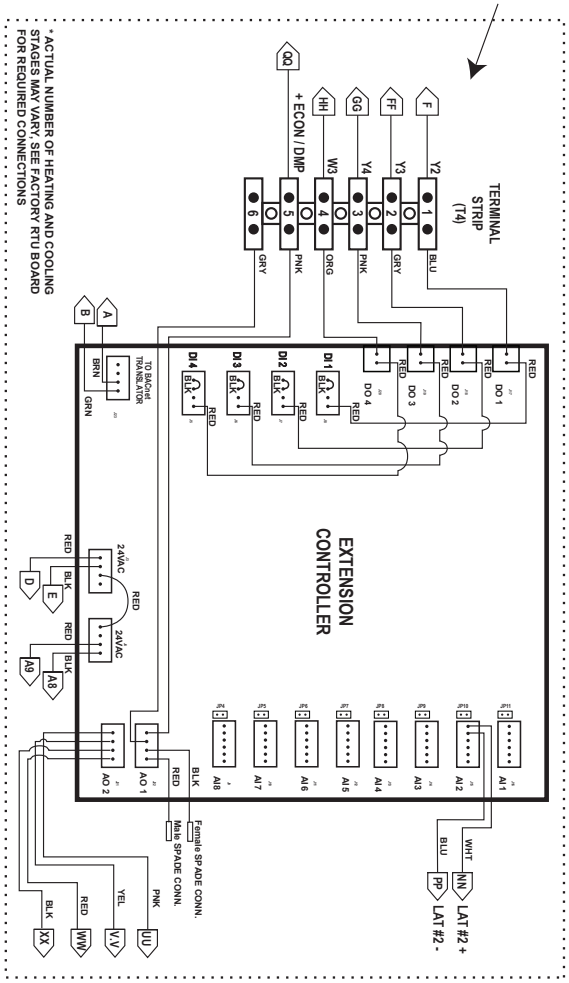

* ACTUAL NUMBER OF HEATING AND COOLING STAGES MAY VARY; SEE FACTORY RTU BOARD FOR REQUIRED CONNECTIONS

A SERIES 3 PHASE WIRING

SCH-0006-E
REVISION: V05.07

— — — — FIELD SUPPLIED WIRING

NOTE: ALL FIELD WIRING MUST BE SHIELDED CABLE OR TWISTED PAIR WITH DRAIN WIRE

TABLE 1 POWERING CONTROLS USING FACTORY TRANSFORMER

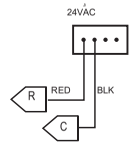

STAND ALONE CONTROLS POWER

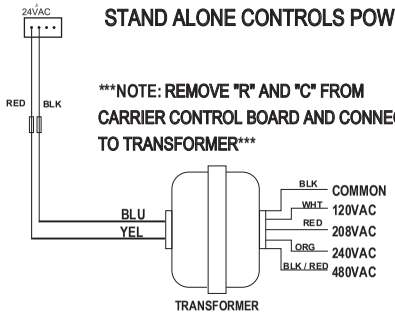

NOTE: REMOVE "R" AND "C" FROM CARRIER CONTROL BOARD AND CONNECT TO TRANSFORMER

NOTE: ENSURE THAT TRANSFORMER IS CONNECTED TO SAME PHASES AS FACTORY TRANSFORMER

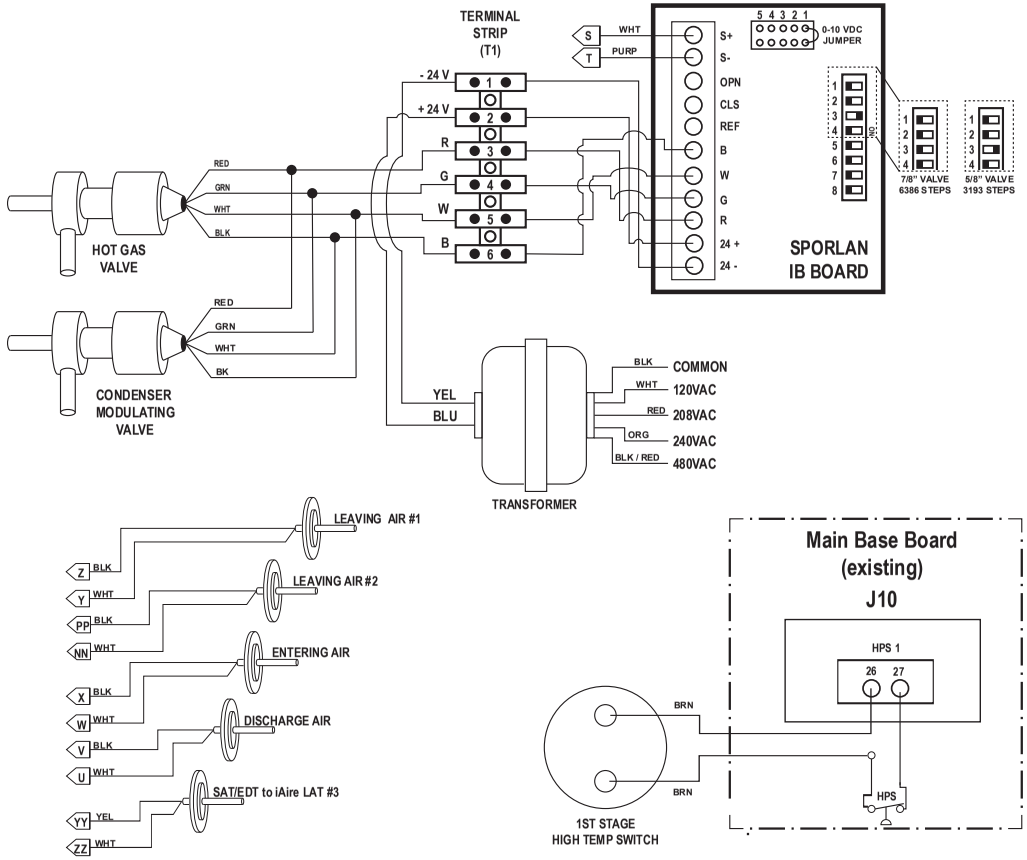

Carrier SAT/EDT to iAire LAT

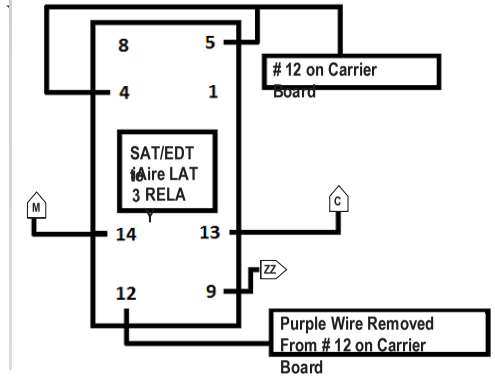

- Remove Factory Wire Connected to Carrier Board #12 (Purple) and Connect to #12 on Relay
- Run a Jumper from Relay #4 to Relay #5
- Connect Relay #5 to #12 on Facatory Main Base Board (Area Labeled as AN 6)

- Cut Factory Wire Connected to Carrier Board #11 (Blue) and reconnect both blues with the Yellow YY wire from the iAire Temp Sensor 2
- Connect White Wire From Temp Sensor 2 to #9 on Relay

A SERIES - GAS HEAT WIRING

SCH-0006-E

REVISION: V05.07

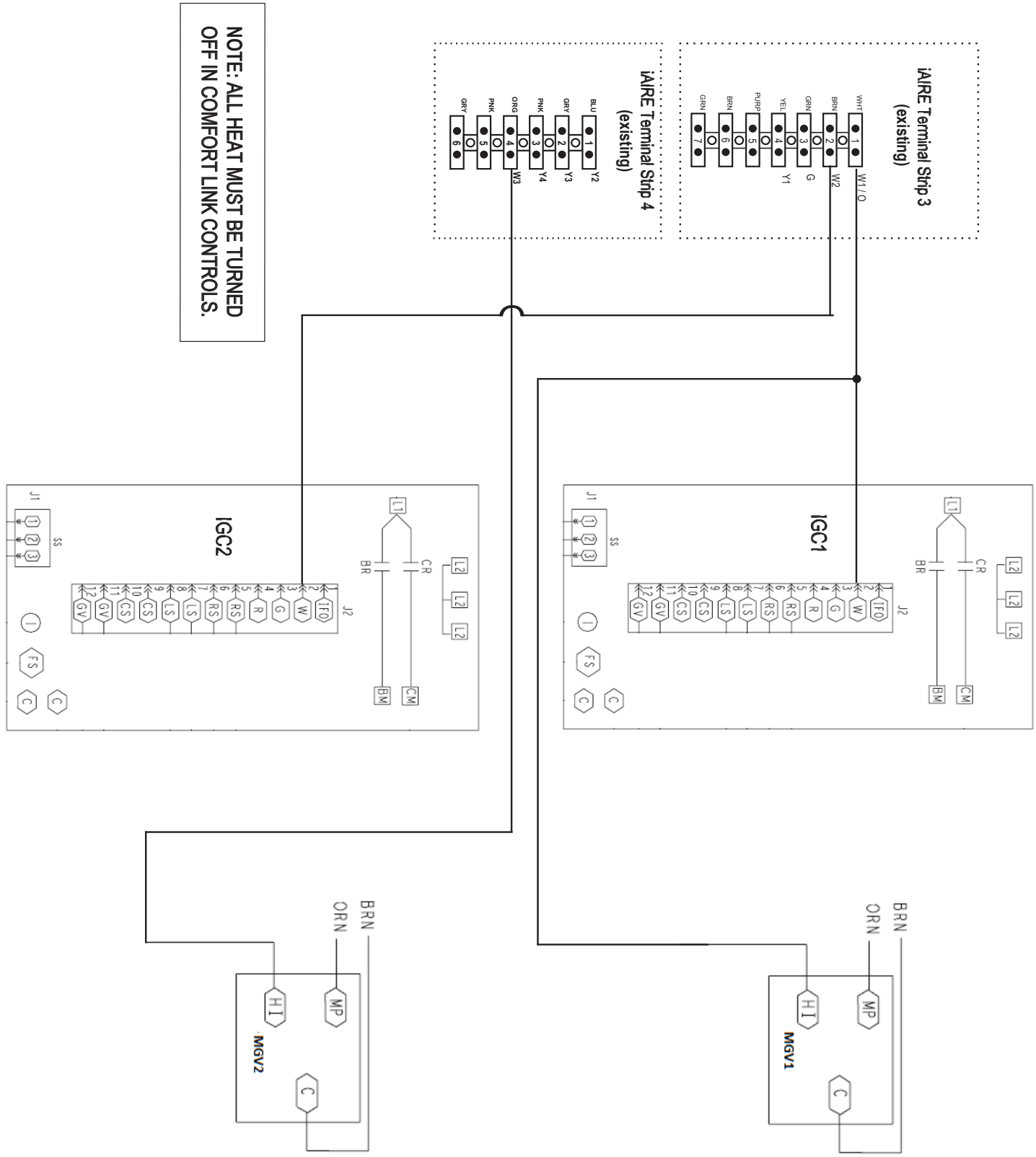

MATED ERV ELECTRO-MECHANICAL WIRING

SCH-0009-E

REVISION: V05.10

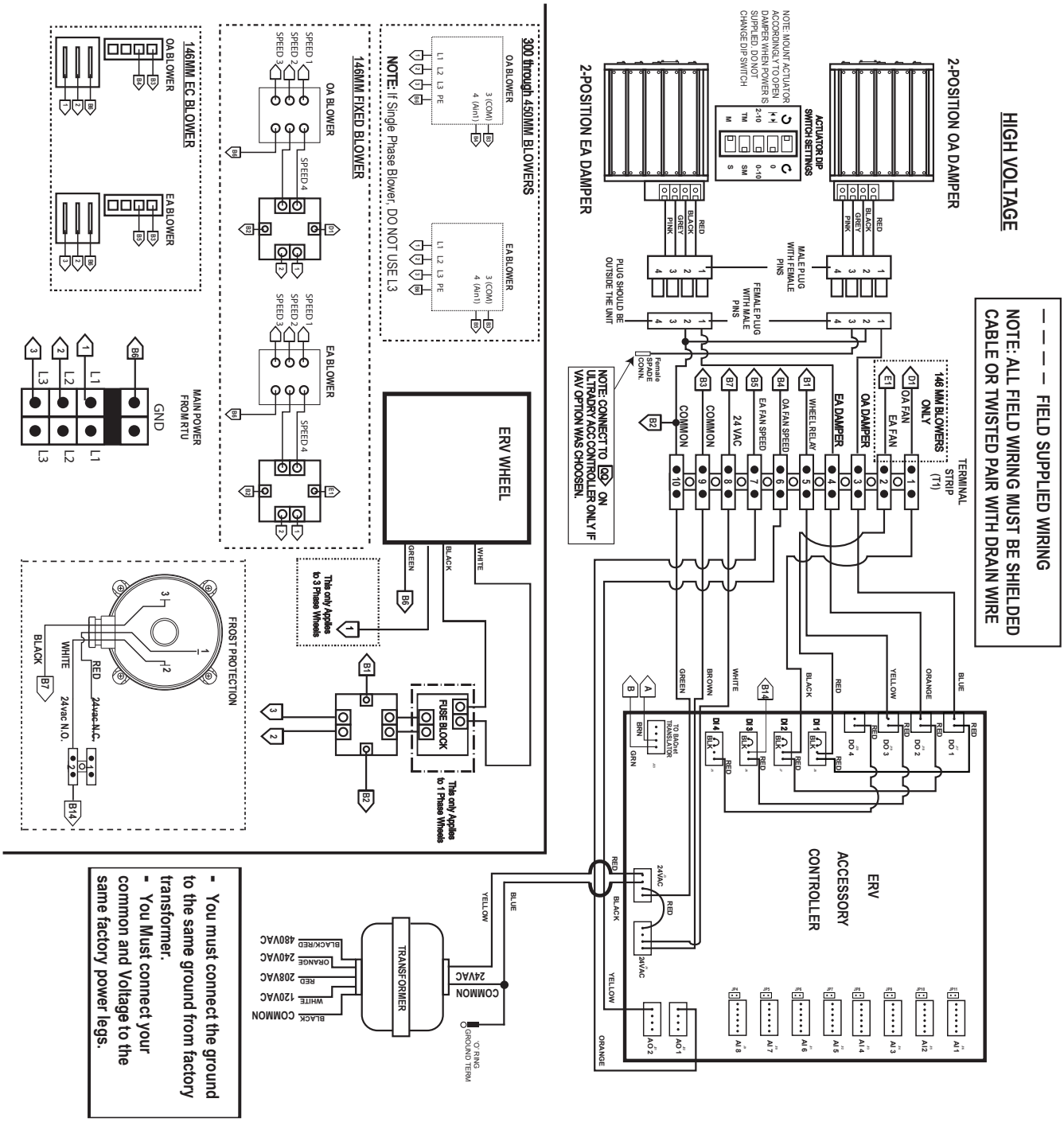

- You must connect the ground to the same ground from factory transformer.
- You Must connect your common and Voltage to the same factory power legs.

iAIRE

MATED ERV IAQ / ECON / DCV WIRING

SCH-0010-E

REVISION: V05.11

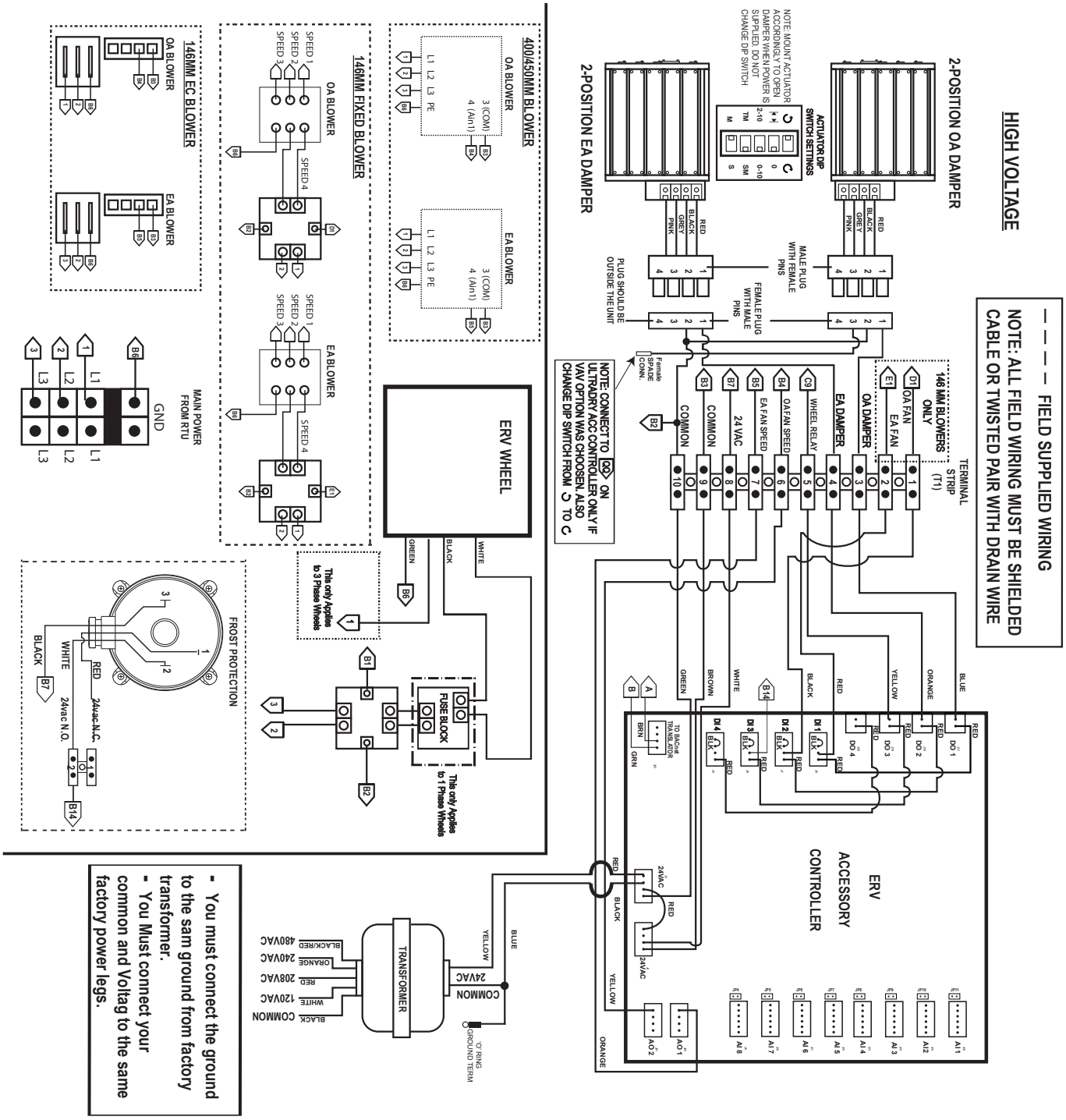

ERV ELECTRO-MECHANICAL w/ BYPASS DAMPER

SCH-0011-E

REVISION: V05.08

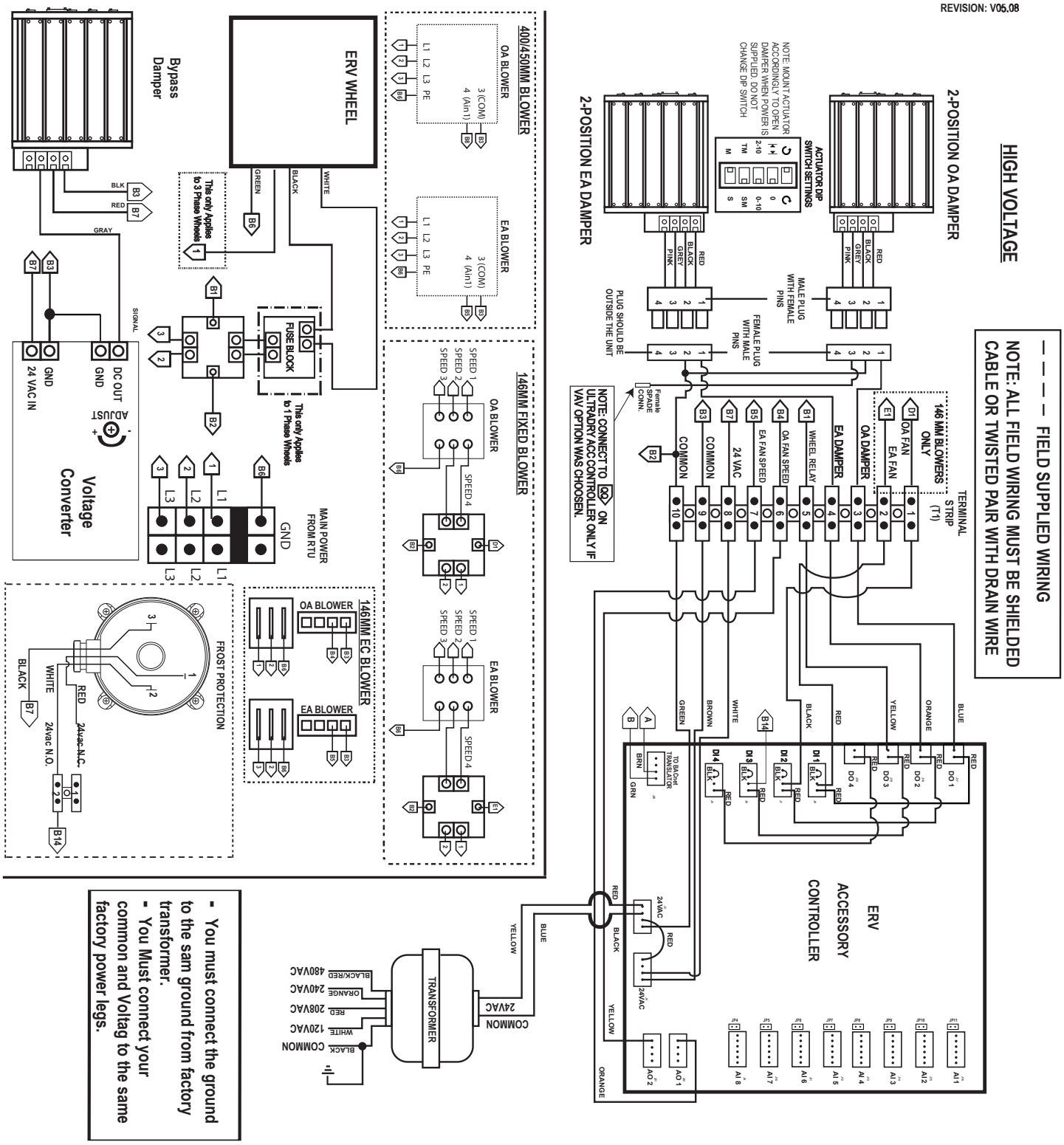

- You must connect the ground to the sam ground from factory transformer.
- You Must connect your common and Voltag to the same factory power legs.

LENZE VFD w/ NO IDF CONTACTOR

SCH-0012-E

Revision: V05.01

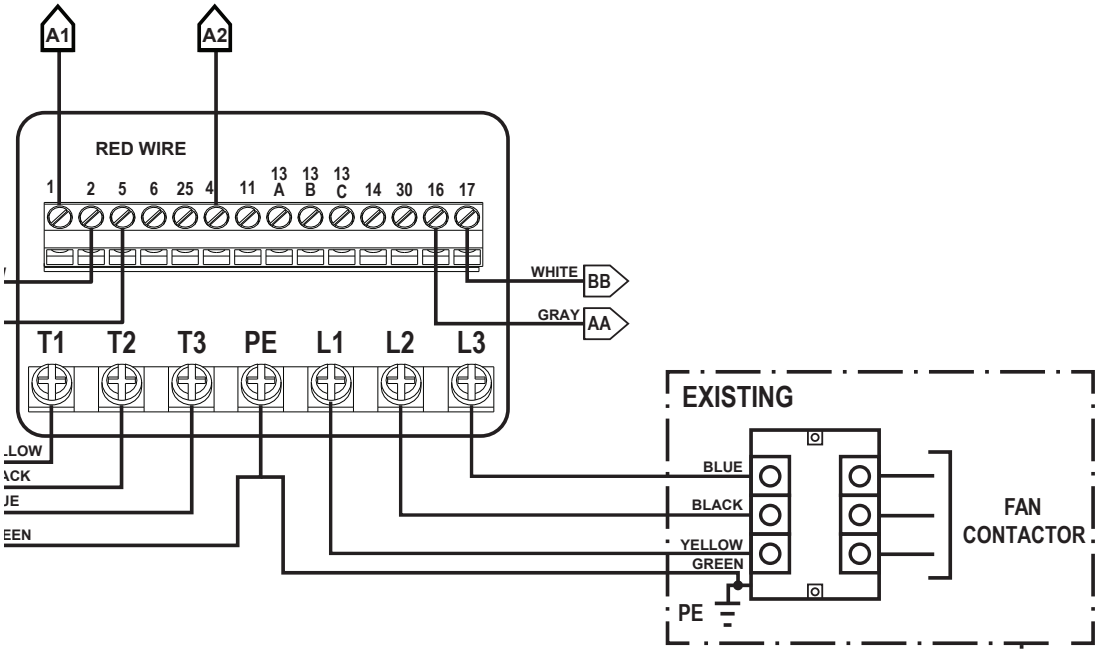

VFD PARAMETERS

P100 = 1	(CONTROL SOURCE = TERMINAL STRIP)
P101 = 1	(REF. SOURCE = 0-10 VDC)
P110 = 6	(START METHOD = LAST KNOWN
P140 = 5	FREQ.)(RELAY OUTPUT = FAULT
P157 = 1	LOCKOUT)
P158 = 1	(IF TB5 < P158 = F_FRU (FAULT))
	(0-10V MONITORING LEVEL = 1 VDC)

RESD. SPLIT WIRING

SCH-0013-E

USE FOR UNITS: 24ABB & FV4C
SCHEMATIC REFERENCE #: SCH-0003

REVISION: V05.03

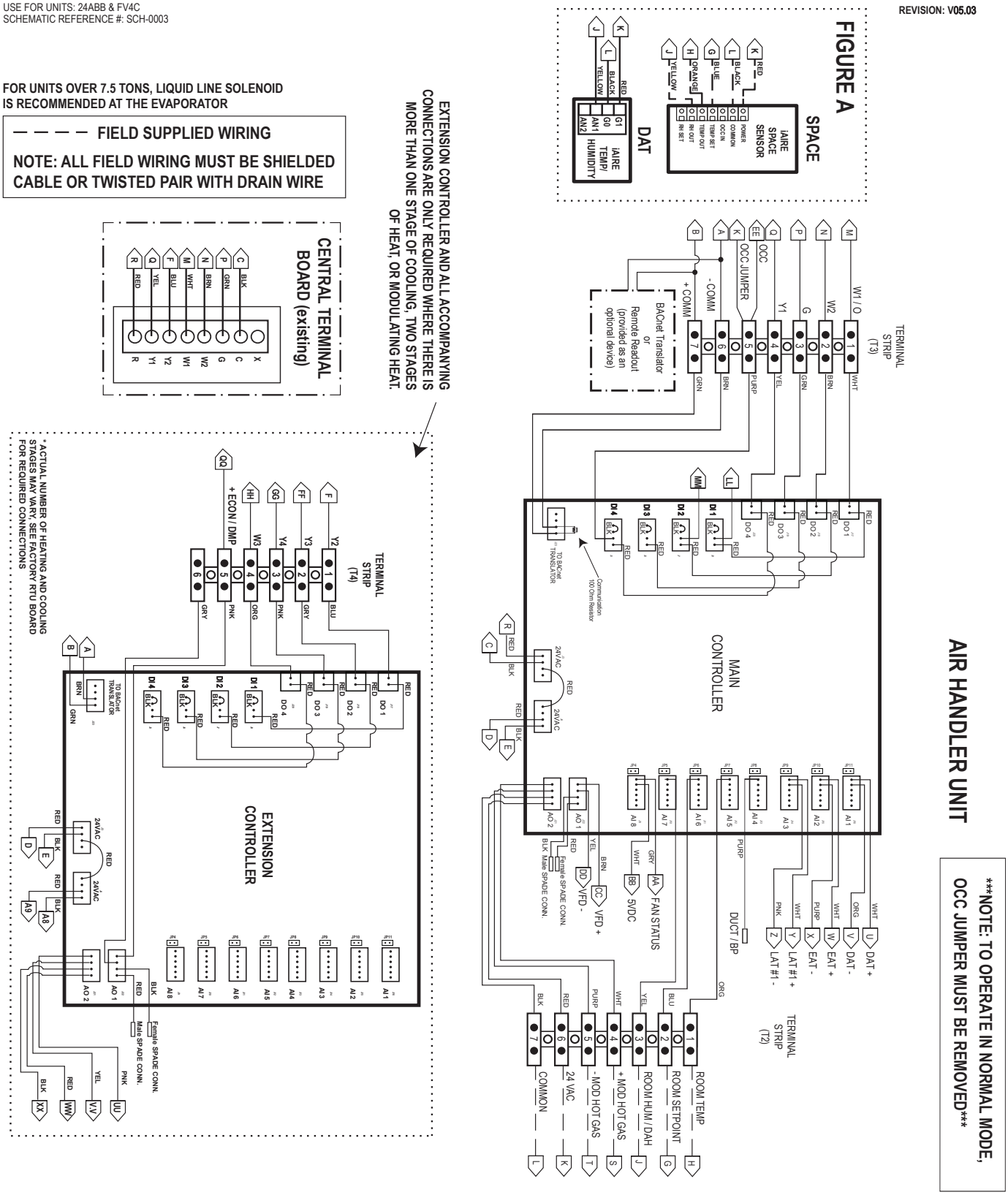

3 Phase Res SPLIT WIRING

SCH-0013-E

REVISION: V05.03

USE FOR UNITS: 24ABB & FV4C
SCHEMATIC REFERENCE #: SCH-0003

— — — —FIELD SUPPLIED WIRING

NOTE: ALL FIELD WIRING MUST BE SHIELDED CABLE OR TWISTED PAIR WITH DRAIN WIRE

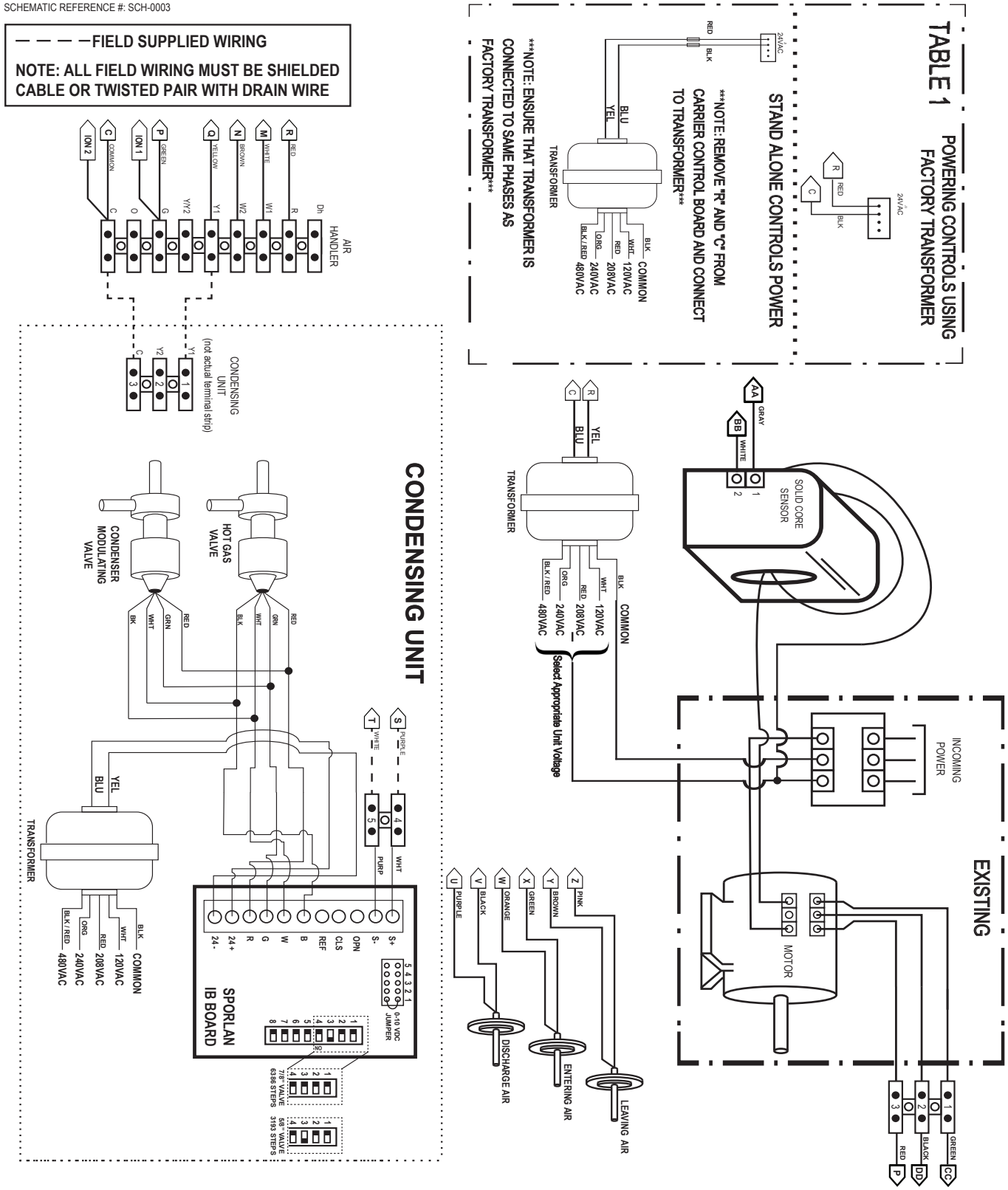

3-PHASE COMM. SPLIT WIRING SCH-0015-E

REVISION: V05.04

FOR UNITS OVER 7.5 TONS, LIQUID LINE SOLENOID IS RECOMMENDED AT THE EVAPORATOR

— — — — FIELD SUPPLIED WIRING

NOTE: ALL FIELD WIRING MUST BE SHIELDED CABLE OR TWISTED PAIR WITH DRAIN WIRE

EXTENSION CONTROLLER AND ALL ACCOMPANYING CONNECTIONS ARE ONLY REQUIRED WHERE THERE IS MORE THAN ONE STAGE OF COOLING, TWO STAGES OF HEAT, OR MODULATING HEAT.

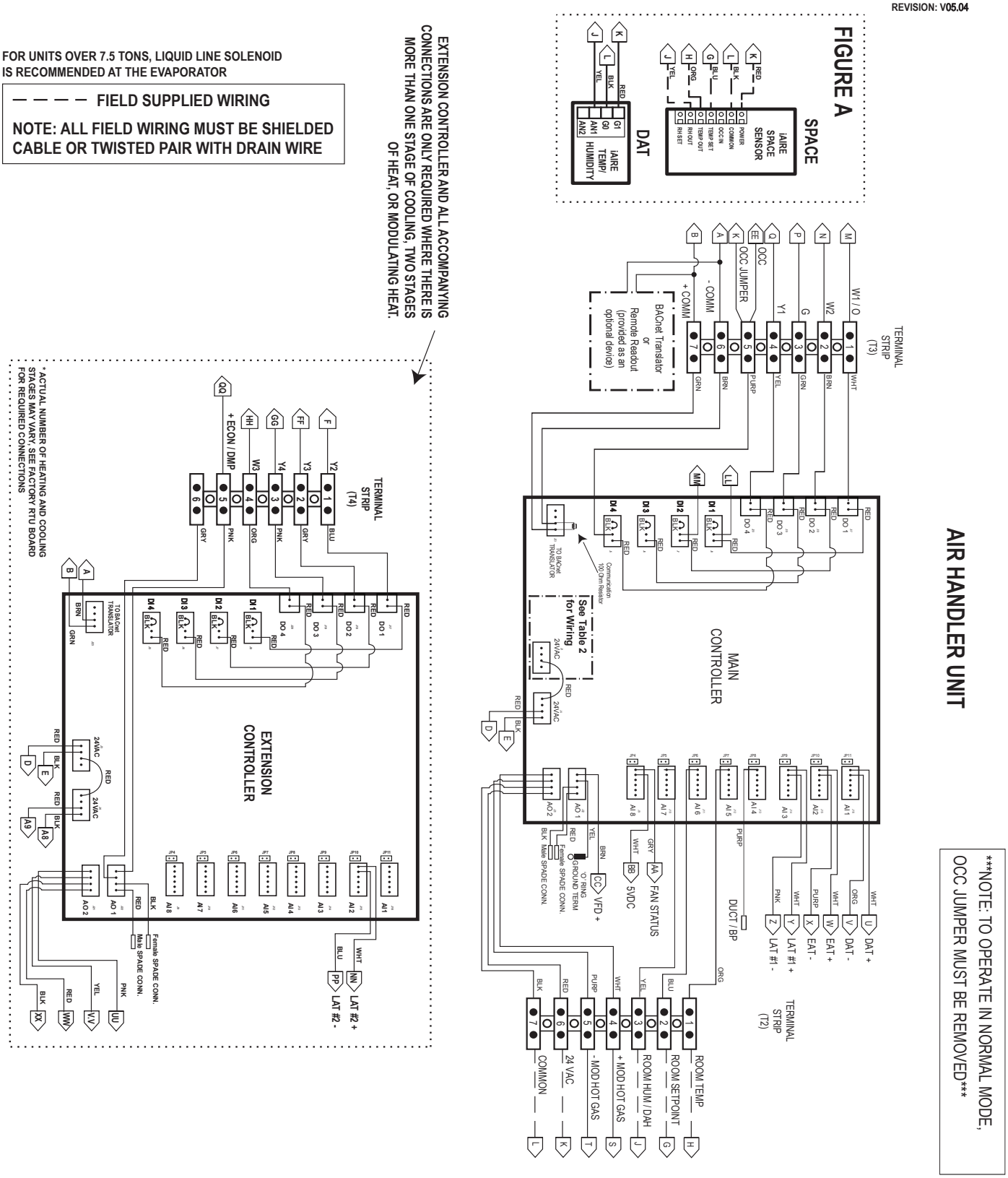

3-PHASE COMM. SPLIT WIRING SCH-0015-E

REVISION: V05.04

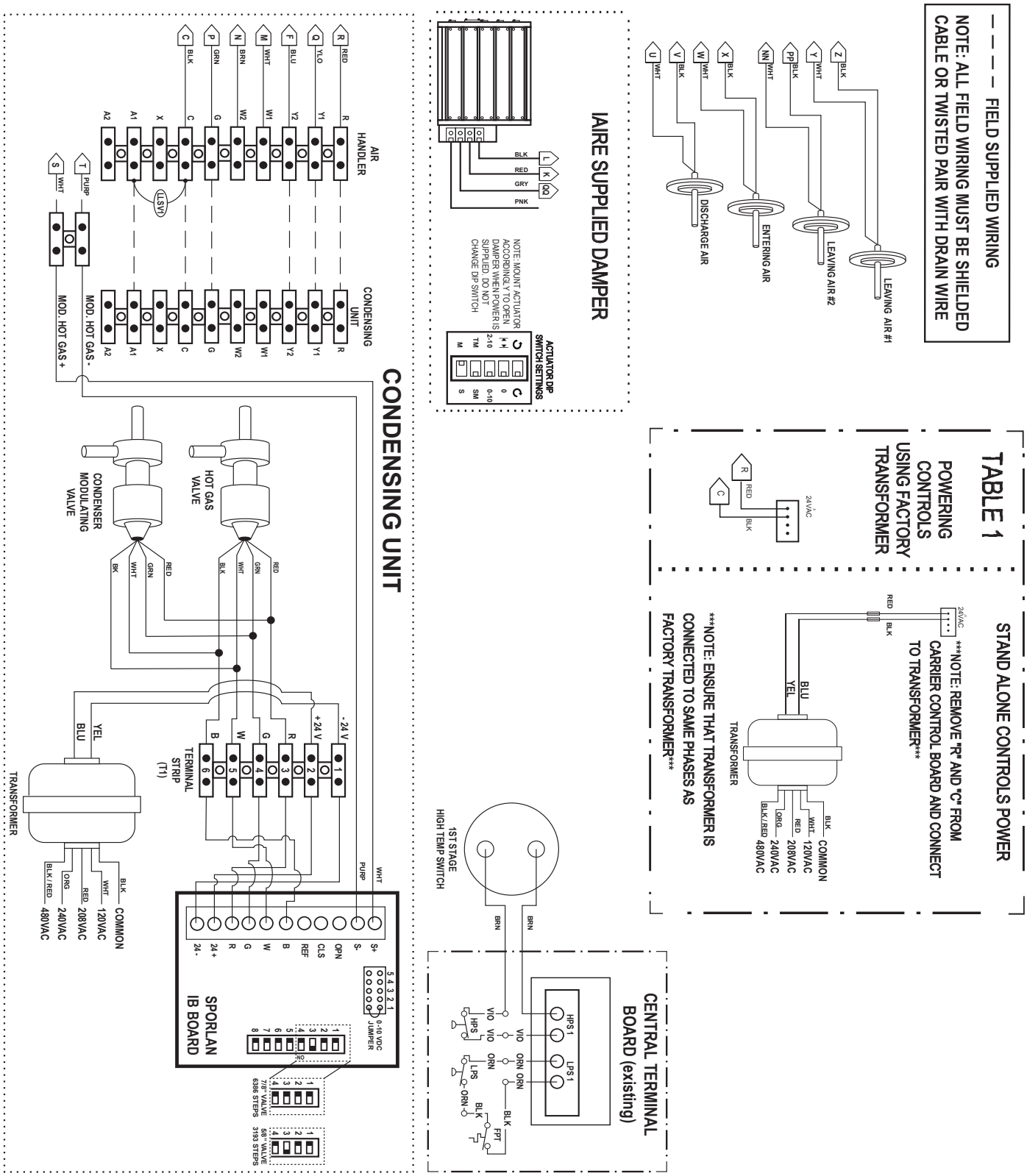

*Additional Comm Split wiring if unit is a heat pump.

3-PHASE COMM. SPLIT WIRING SCH-0015-E

REVISION: V05.04

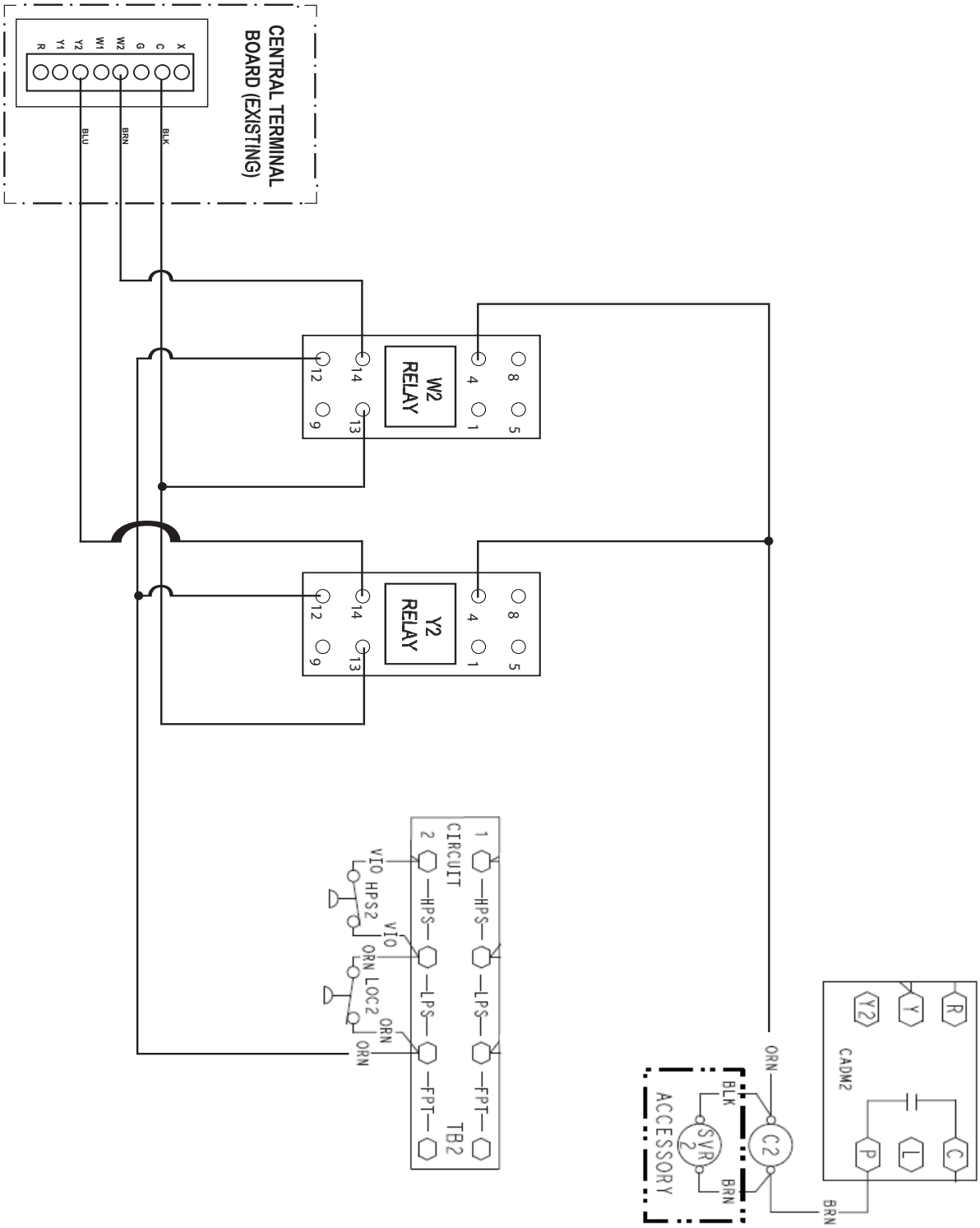

3-PHASE RTU WIRING - HEAT PUMP

SCH-0016-E

REVISION: V05.03

FOR UNITS OVER 7.5 TONS, LIQUID LINE SOLENOID IS RECOMMENDED AT THE EVAPORATOR

— — — — FIELD SUPPLIED WIRING

NOTE: ALL FIELD WIRING MUST BE SHIELDED CABLE OR TWISTED PAIR WITH DRAIN WIRE

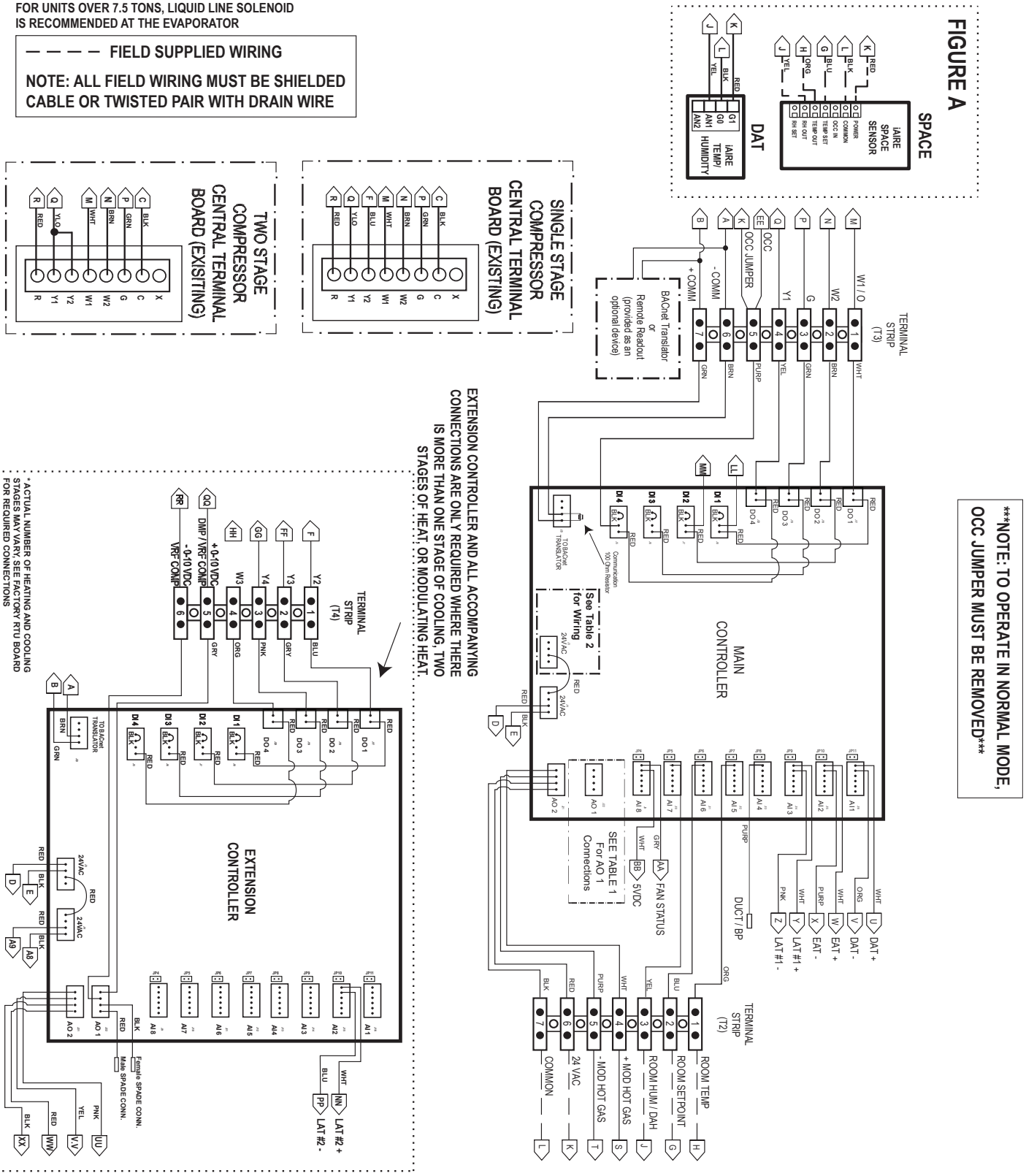

PHASE RTU WIRING - HEAT PUMP

SCH-0016-E

REVISION: V05.03

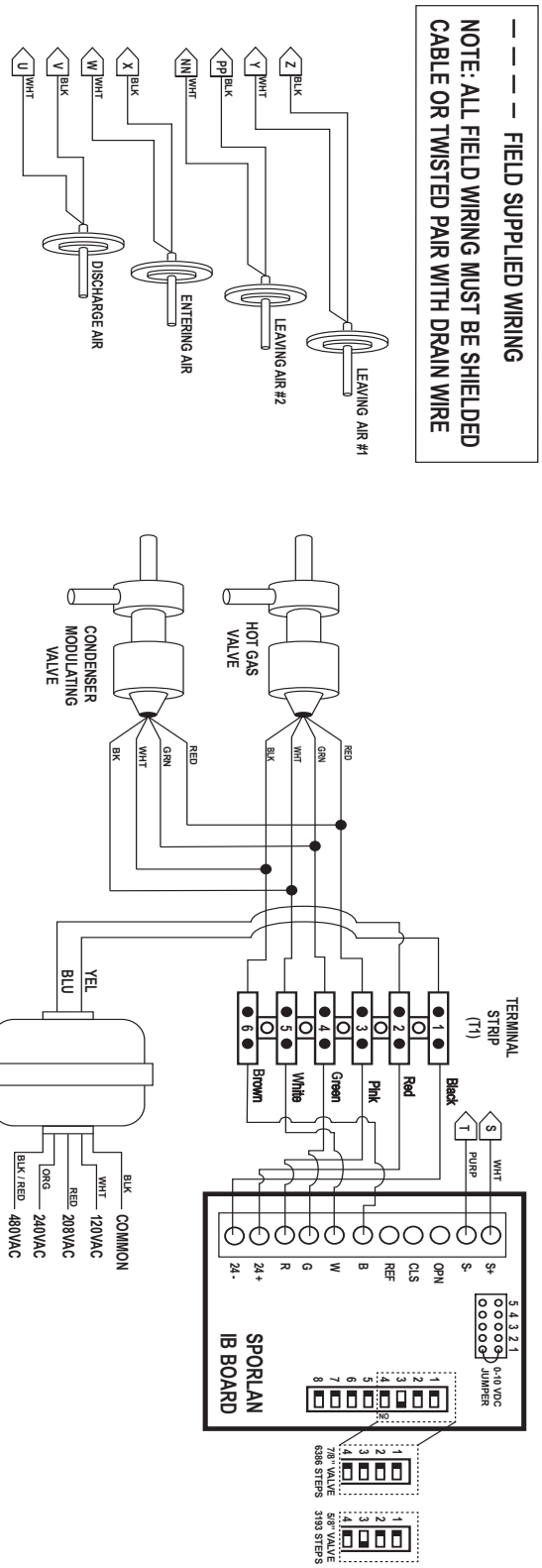

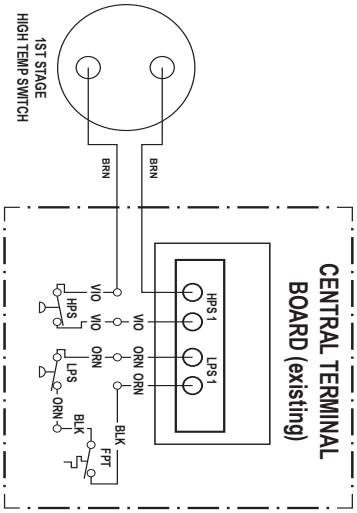

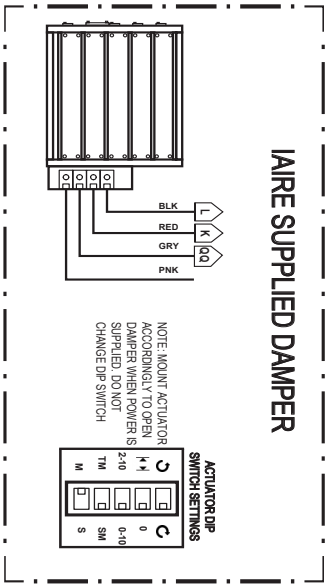

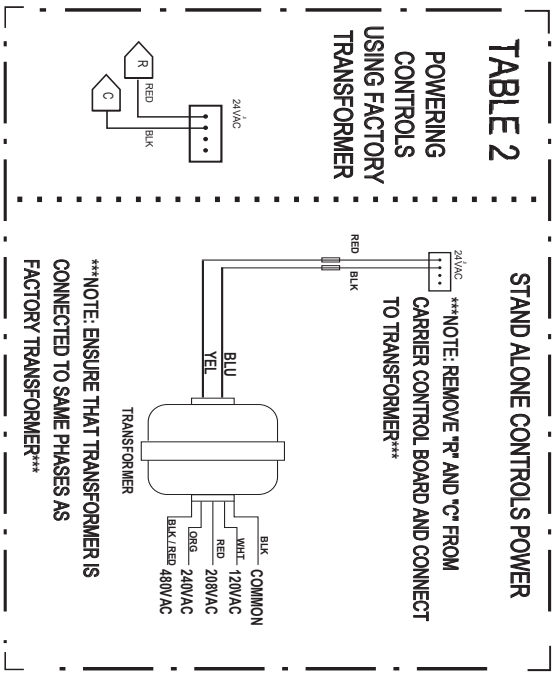

PHASE RTU WIRING- HEAT PUMP

SCH-0016-E

REVISION: V05.03

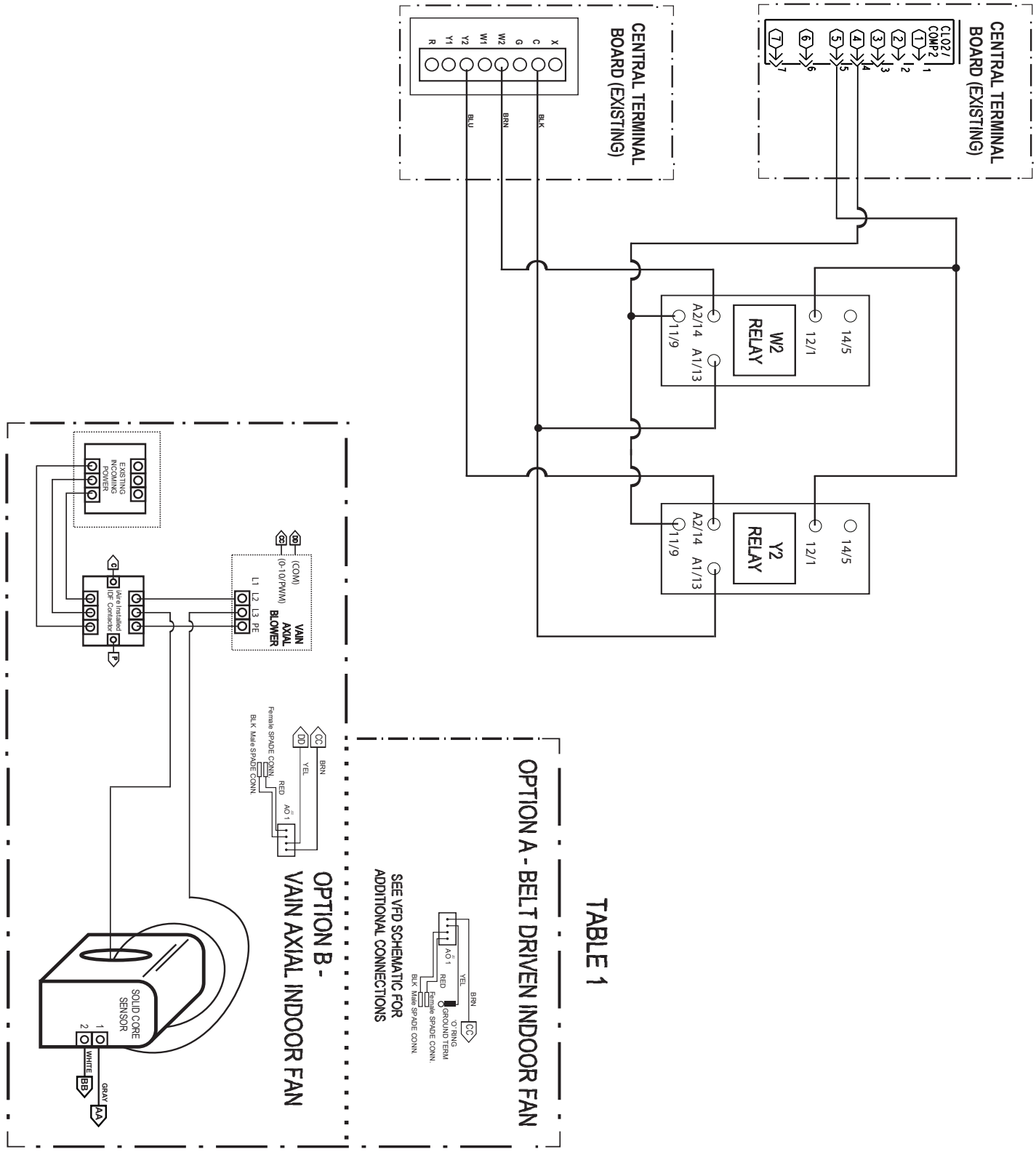

RTU PIPING DIAGRAM

SCH-0001-P

REVISION: V05.02

SAFETIES

AT LOW SUCTION PRESSURES (LOW LOAD) THE RAWAL DEVICE WILL BYPASS HOT GAS TO THE COMPRESSOR. RAWAL DEVICE WILL ALSO INJECT SOME LIQUID REFRIGERANT INTO SUCTION LINE TO AVOID OVERHEATING THE COMPRESSOR DURING BYPASS. THIS WILL ALSO PROLONG USE OF FIRST STAGE AND IMPROVE DEHUMIDIFICATION.

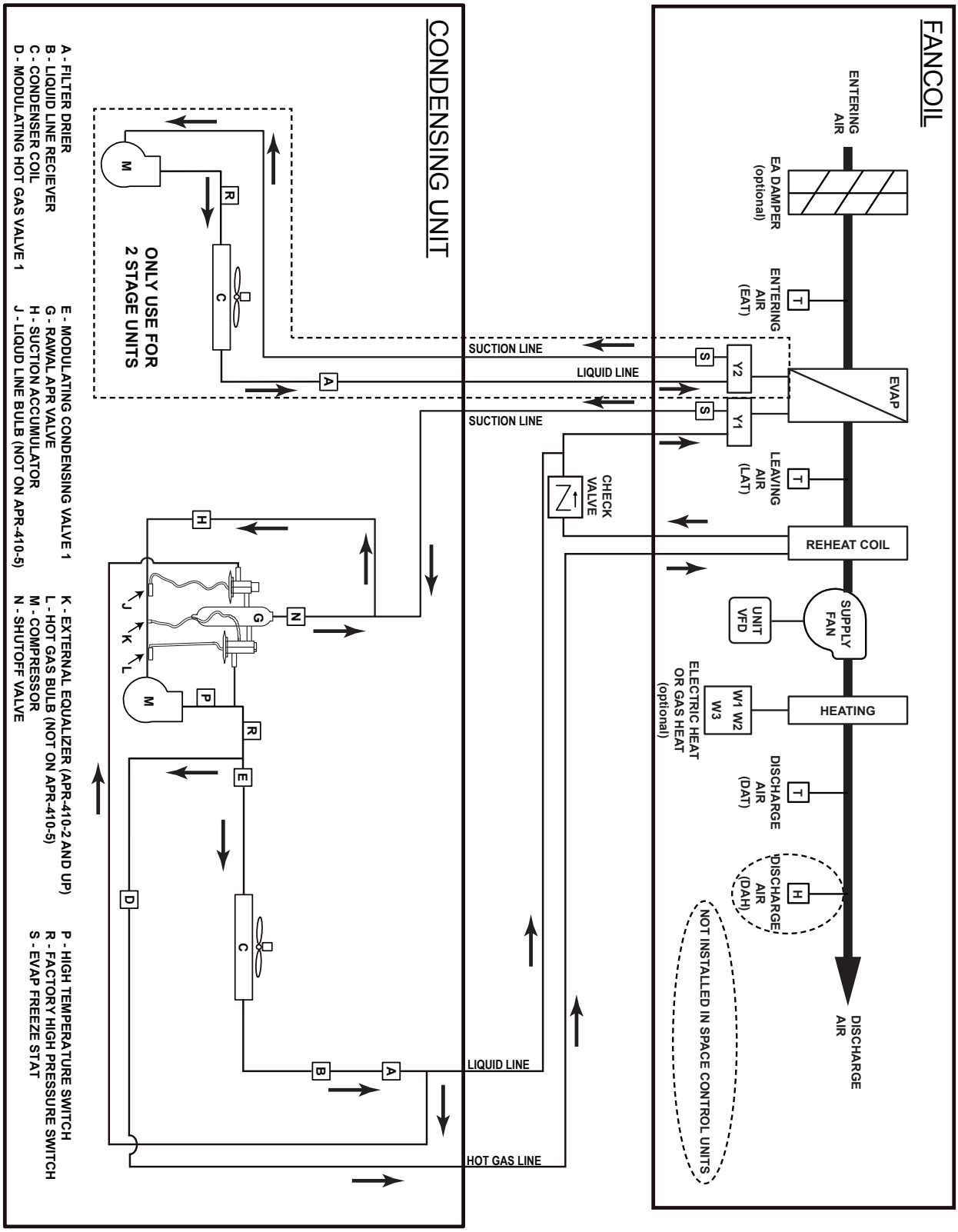

RTU HP PIPING DIAGRAM

SCH-0002-P

REVISION: V05.02

SAFETIES

AT LOW SUCTION PRESSURES (LOW LOAD) THE RAWAL DEVICE WILL BYPASS HOT GAS TO THE COMPRESSOR. RAWAL DEVICE WILL ALSO INJECT SOME LIQUID REFRIGERANT INTO SUCTION LINE TO AVOID OVERHEATING THE COMPRESSOR DURING BYPASS. THIS WILL ALSO PROLONG USE OF FIRST STAGE AND IMPROVE DEHUMIDIFICATION.

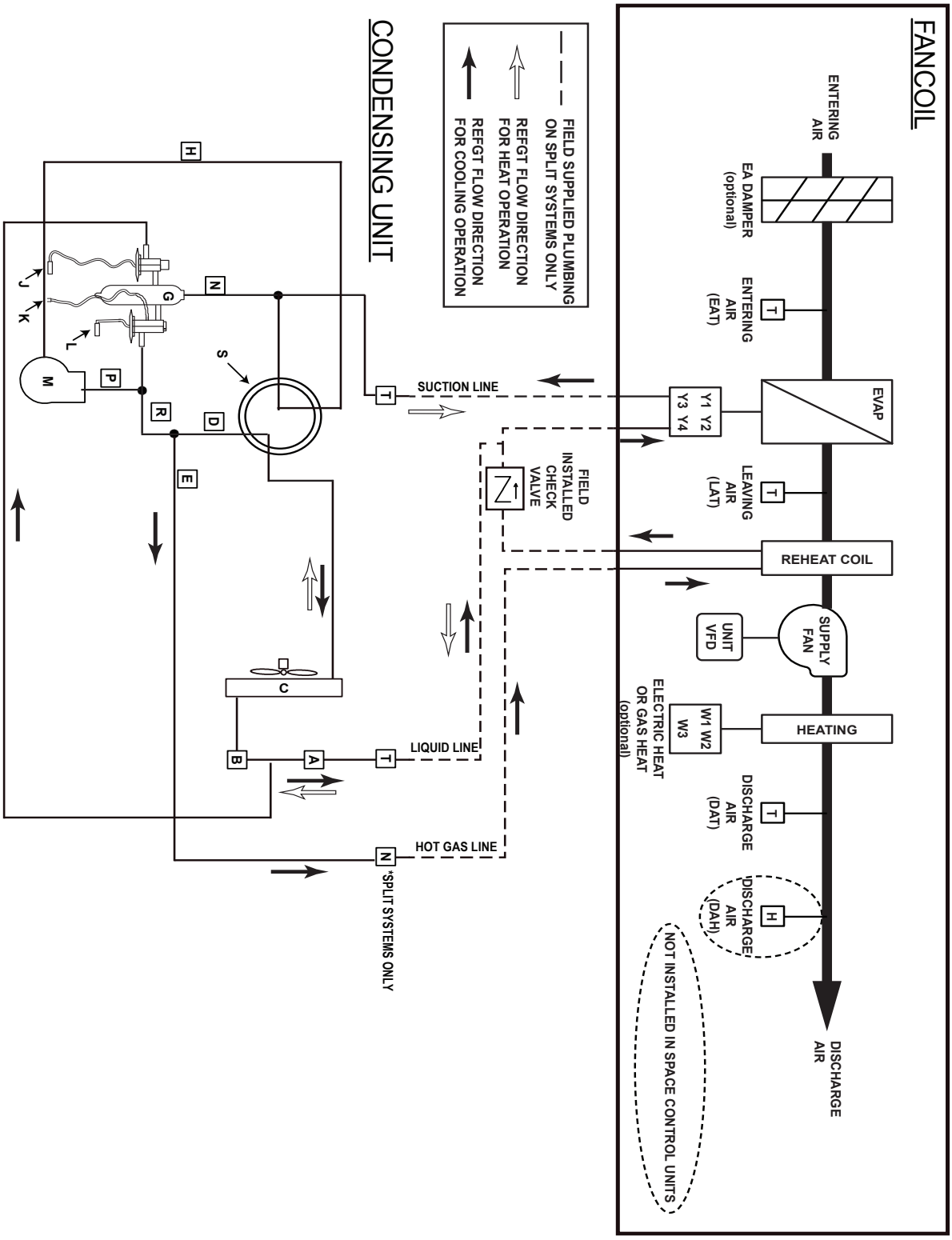

A - FILTER DRIER
B - LIQUID LINE RECIEVER
C - CONDENSER COIL
D - MODULATING HOT GAS VALVE 1
E - MODULATING CONDENSING VALVE 1
G - RAWAL APR VALVE
H - SUCTION ACCUMULATOR
J - LIQUD LINE BULB (NOT ON APR-410-5)
K - EXTERNAL EQUALIZER (APR-410-2 AND UP)
L - HOT GAS BULB (NOT ON APR-410-5)
M - COMPRESSOR
N - SHUTOFF VALVE
P - RAWAL HIGH TEMPERATURE SWITCH
Q - LOW-AMBIENT CONTROL OPTION
R - FACTORY HIGH PRESSURE SWITCH
S - REVERSING VALVE
T - FACTORY MAINTENANCE VALVE

IONIZATION OPTION WIRING

SCH-0001-O

REVISION: V05.01

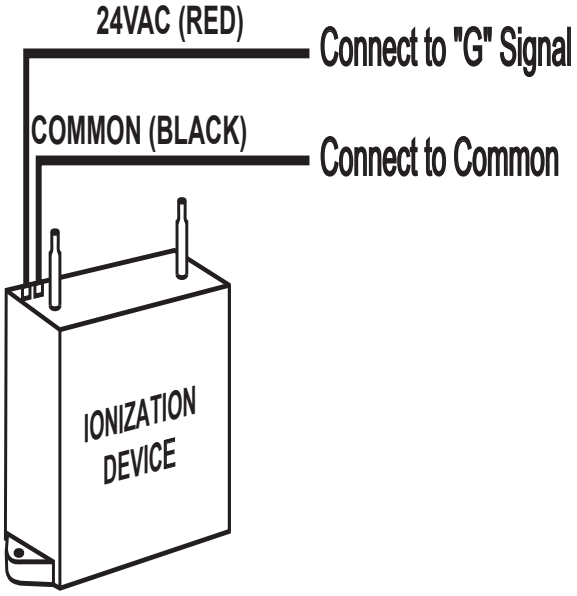

24 HOUR CLOCK OPTION WIRING

SCH-0002-O

REVISION: V5.0.0.1

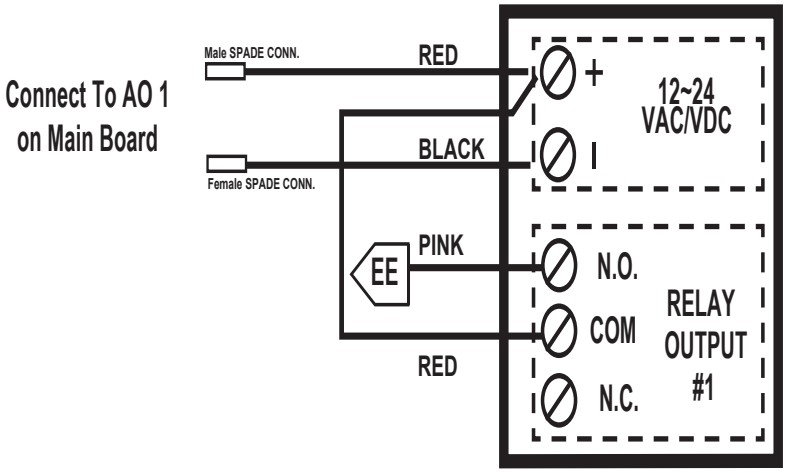

DIRTY FILTER SWITCH OPTION WIRING

SCH-0003-O

REVISION: V5.0.0.1

WIRING

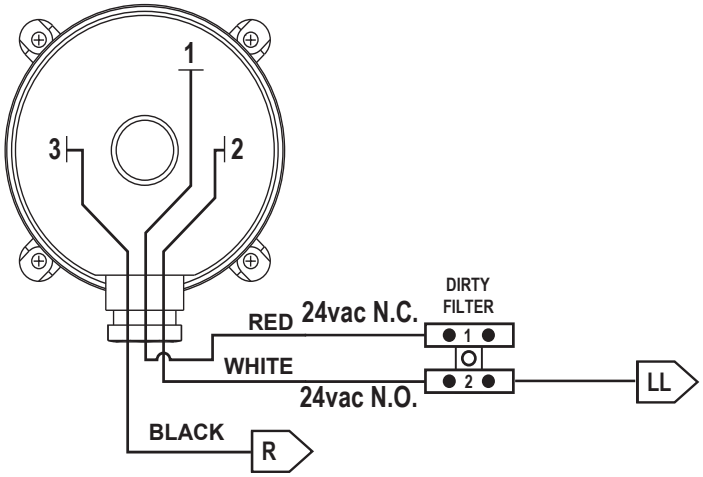

PRESSURE TUBES

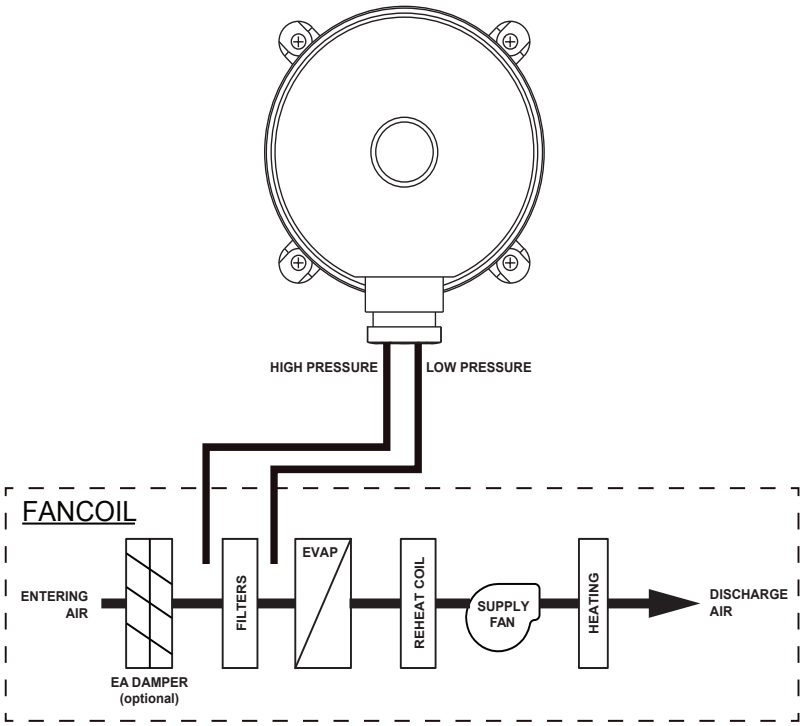

2-POS DAMPER OPTION WIRING

SCH-0004-O

REVISION: V5.0.0.1

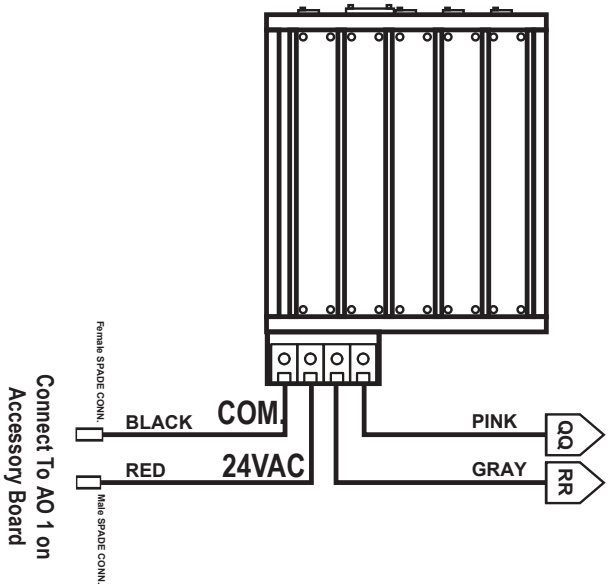

MOD GAS HEAT OPTION WIRING

SCH-0005-O

REVISION: V5.0.0.2

DIP Switches

A three (3) position DIP switch is located on the PCB (see Figure 2). Change the signal type and offset by changing the position of DIP switches. (For DIP switch position and corresponding current/voltage ranges, see Table below). IAIRE uses 0-10V Setup

DIP Switch Position Table			
Control Signal	SW1 Signal	SW2 Offset	SW3 Characteristic
0-10 V	OFF	OFF	OFF
2-10 V	OFF	ON	OFF
0-20 mA	ON	OFF	OFF
4-20 mA	ON	ON	OFF

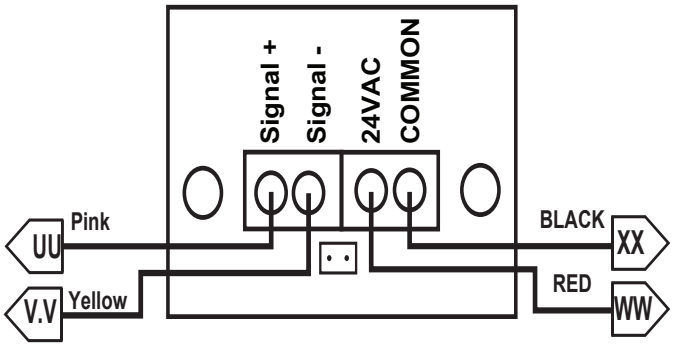

BACNET OPTION WIRING

SCH-0006-O

REVISION: V5.0.0.5

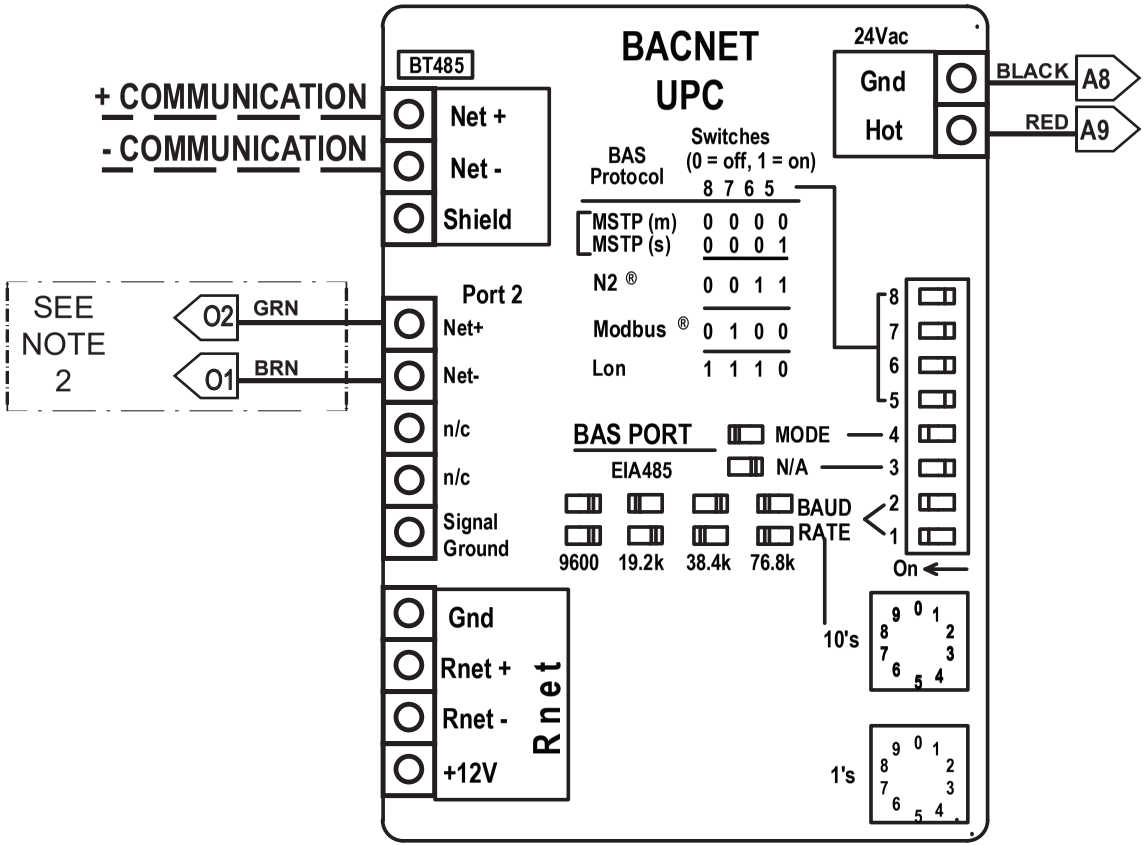

— — —FIELD SUPPLIED WIRING

NOTE 1: BacNet Communication Has 3 Minute Delay upon Power Up

NOTE 2: All Communication Wires Between BacNet and iAire Controllers must be Shielded Wire

BACNET POINTS LIST

iAIRE POINT NAME	POINT TYPE	BACNET OBJECT NAME	OBJECT TYPE	DEFAULT SET POINTS	READ ACCESS
FAN STATUS AV	ANALOG	fan_status_av	AV	0%	READ ONLY
FAN FAULT	DIGITAL	fan_fault	BV	N/A	READ ONLY
UNIT CONTROL		unit_control	MSV	N/A	READ ONLY
ENTERING AIR TEMP	ANALOG	ea_temp	AV	58.6°F	READ ONLY
COOLING 1	DIGITAL	cooling_1	BV	N/A	READ ONLY
LEAVING AIR TEMP	ANALOG	la_temp	AV	57.6°F	READ ONLY
COOLING 2	DIGITAL	cooling_2	BV	N/A	READ ONLY
DISCHARGE AIR TEMP	ANALOG	da_temp	AV	57.6°F	READ ONLY
COOLING 3	DIGITAL	cooling_3	BV	N/A	READ ONLY
HUMIDITY	ANALOG	humidity	AV	0%rh	READ ONLY
COOLING 4	DIGITAL	cooling_4	BV	N/A	READ ONLY
VERSION D3.0	ANALOG	version_number	AV	No Units	READ ONLY
HEATING 1	DIGITAL	heating_1	BV	N/A	READ ONLY
HOT GAS REHEAT	ANALOG	hot_gas_reheat	AV	0%	READ ONLY
HEATING 2	DIGITAL	heating_2	BV	N/A	READ ONLY
VFD SPEED	ANALOG	vfd_speed	AV	50%	READ ONLY
HEATING 3	DIGITAL	heating_3	BV	N/A	READ ONLY
ROOM TEMP	ANALOG	room_temp	AV	32°F	READ ONLY
FAN ENABLE	DIGITAL	fan_enable	BV	N/A	READ ONLY
ROOM TEMP SETPOINT	ANALOG	room_temp_stp	AV	62°F	READ ONLY
DIRTY FILTER	DIGITAL	dirty_filter	BV	N/A	READ ONLY
DUCT OR BUILDING PRESSURE	ANALOG	duct_or_buildingpressure	AV	0 in H_2O	READ ONLY
WATER GUARD	DIGITAL	water_guard	BV	N/A	READ ONLY
FREEZE1	DIGITAL	freeze_1	BV	N/A	READ ONLY
FREEZE2	DIGITAL	freeze_2	BV	N/A	READ ONLY
BAS VFD SPEED COOL	ANALOG	bas_vfd_speed_cool	AV	50%	READ / WRITE
FAN STATUS BV	DIGITAL	fan_status_bv	BV	N/A	READ ONLY
BAS VFD SPEED HEAT	ANALOG	bas_vfd_speed_heat	AV	50%	READ / WRITE
BAS DAT SETPOINT	ANALOG	bas_dat_stp	AV	72°F	READ / WRITE
BAS ROOM SETPOINT	ANALOG	bas_room_setpoint	AV	72°F	READ / WRITE
BAS HUMIDITY LOCKOUT	ANALOG	bas_humidity_lout	AV	50%rh	READ / WRITE
BAS HUMIDITY LOCKOUT 2	ANALOG	bas_humidity_lout2	AV	55%rh	READ / WRITE
BAS EAT COOL LOCKOUT	ANALOG	bas_eat_cool_lout	AV	61°F	READ / WRITE
BAS EAT DEAD BAND	ANALOG	bas_eat_dead_band	AV	3°F	READ / WRITE
BAS SWITCH (OCC)	ANALOG	bas_switch	AV	1	READ / WRITE
BAS LAT SETPOINT	ANALOG	bas_lat_sp	AV	55°F	READ / WRITE
VFD SPEED COOL	ANALOG	vfd_speed_cool	AV	%	READ ONLY
VFD SPEED HEAT	ANALOG	vfd_speed_heat	AV	%	READ ONLY
DAT SETPOINT	ANALOG	dat_stp	AV	°F	READ ONLY
ROOM SETPOINT	ANALOG	roomsetpoint	AV	°F	READ ONLY
HUMIDITY LOCKOUT	ANALOG	humidity_lockout	AV	%rh	READ ONLY
HUMIDITY LOCKOUT 2	ANALOG	humidity_lockout2	AV	%rh	READ ONLY
LAT SP	ANALOG	lat_sp	AV	°F	READ ONLY
EAT COOL LOCKOUT	ANALOG	eat_cool_lockout	AV	°F	READ ONLY
EAT HEAT LOCKOUT	ANALOG	eat_heat_lout	AV	°F	READ ONLY
SWITCH	ANALOG	switch	AV	N/A	READ ONLY
BAS PRESSURE SETPOINT	ANALOG	bas_pressure_sp	AV	1.2 in H_2O	READ / WRITE
PRESSURE SETPOINT	ANALOG	pressure_setpoint	AV	in H_2O	READ ONLY
MINIMUM FAN SPEED	ANALOG	minimum_fan_speed	AV	%	READ ONLY

BACNET POINTS LIST (cont.)

iAIRE POINT NAME	POINT TYPE	BACNET OBJECT NAME	OBJECT TYPE	DEFAULT SET POINTS	READ ACCESS
BAS MINIMUM FAN SPEED	ANALOG	bas_min_fan_speed	AV	40%	READ / WRITE
MAXIMUM FAN SPEED	ANALOG	maximum_fan_speed	AV	100%	READ ONLY
BAS MAXIMUM FAN SPEED	ANALOG	bas_max_fan_speed	AV	80%	READ / WRITE
OA FAN SPEED	ANALOG	outsideair_fan_speed	AV	50%	READ ONLY
BAS OA FAN SPEED	ANALOG	bas_oa_fan_speed	AV	50%	READ / WRITE
EAFAN SPEED	ANALOG	exhaustair_fan_speed	AV	50%	READ ONLY
BAS EA FAN SPEED	ANALOG	bas_ea_fan_speed	AV	50%	READ / WRITE
DAMPER POSITION	ANALOG	damper_position	AV	0%	READ ONLY
BAS DAMPER POSITION	ANALOG	bas_damper_position	AV	100%	READ / WRITE
FREEZE PROTECTION	ANALOG	freeze_protection	AV	39°F	READ ONLY
BAS FREEZE PROTECTION	ANALOG	bas_freeze_protection	AV	39°F	READ / WRITE

WATER GUARD OPTION WIRING

SCH-0007-O

REVISION: V05.04

Installing with iAIRE Control Types A,B,D,E,F,P,S,U,V

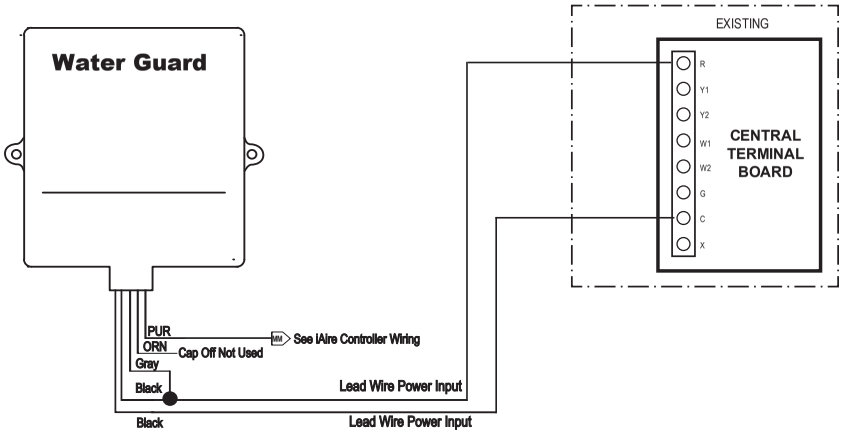

WATER GUARD OPTION WIRING

SCH-0007-O

REVISION: V05.04

Installing with iAIRE Control Types C,H,T, and No Controls

WIRING IF NO CENTRAL CONTROL BOARD

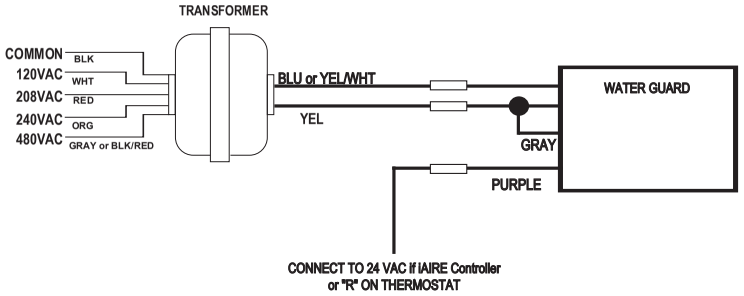

WIRING WITH CENTRAL CONTROL BOARD

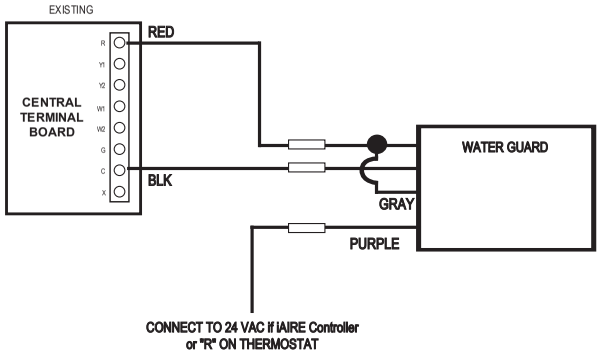

POWERED SERVICE OUTLET OPTION WIRING SCH-0010-O

REVISION: V5.0.0.1

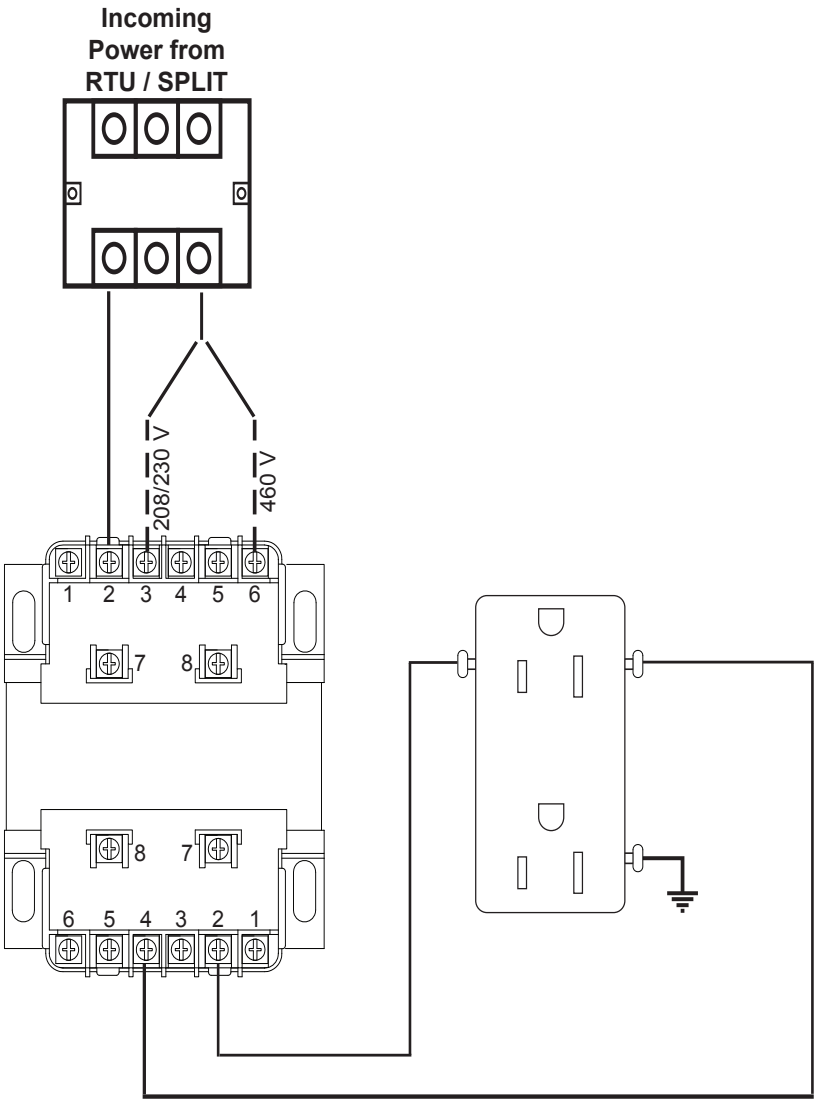

SCR HEAT OPTION WIRING

SCH-0011-O

REVISION: V5.0.0.1

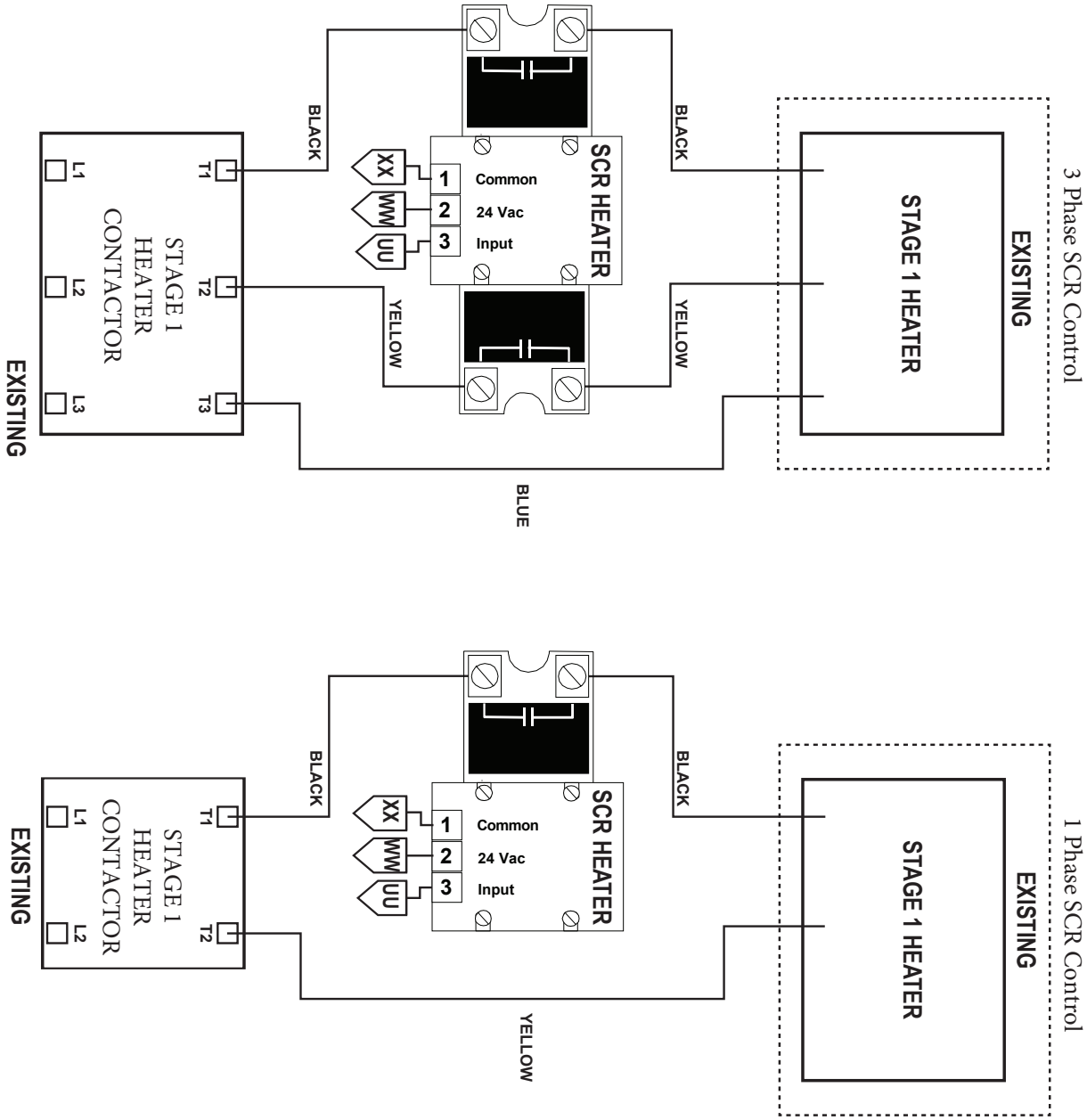

Dip Switch Position
0 to 10 VDC control signal

S1	S2	S3	S4
Off	Off	Off	On

SMOKE SENSOR OPTION WIRING

SCH-0012-O

REVISION: V3-2.0.3

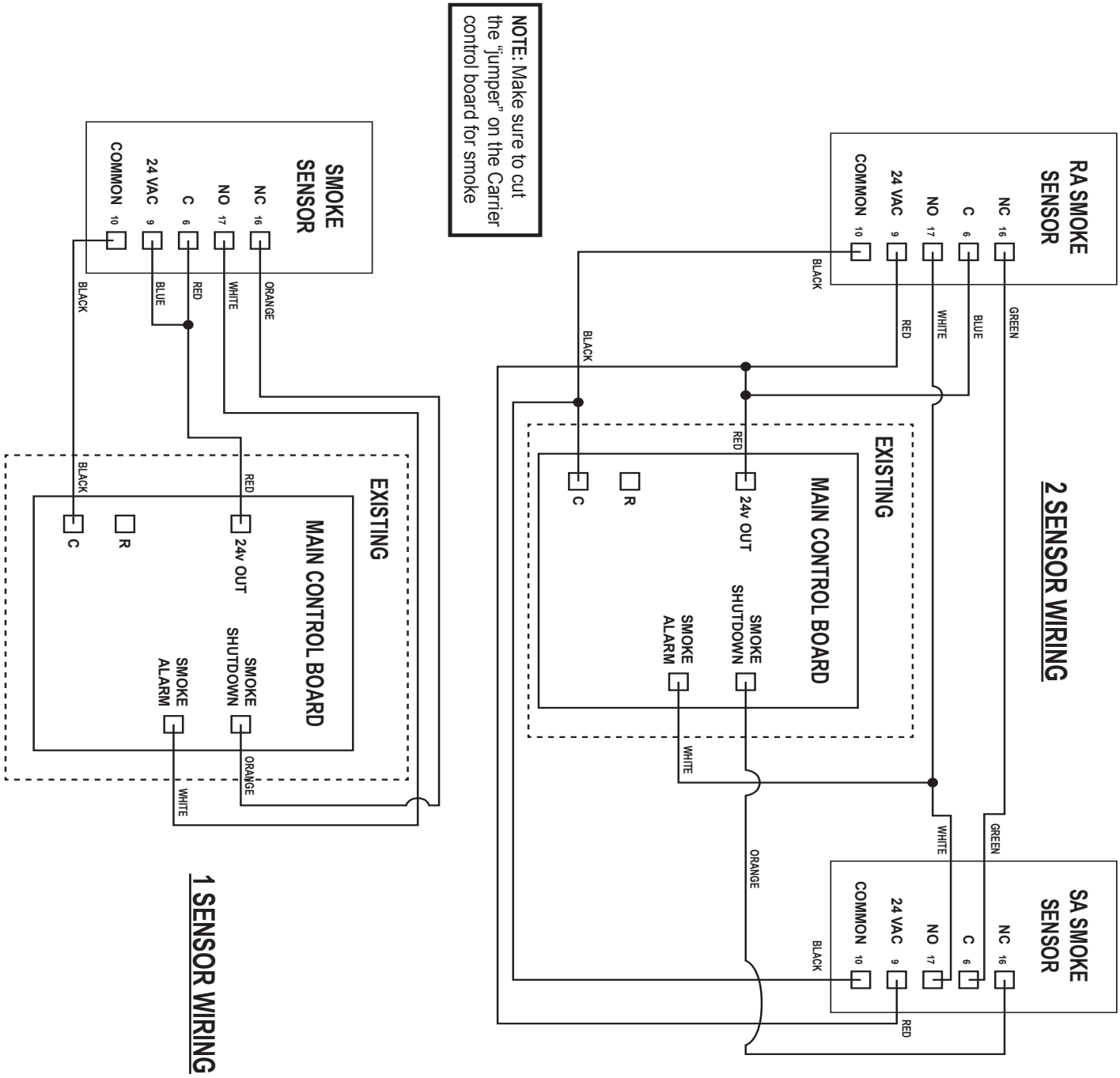

STANDALONE IONIZATION WIRING

SCH-0015-O

REVISION: V3-2.0.0

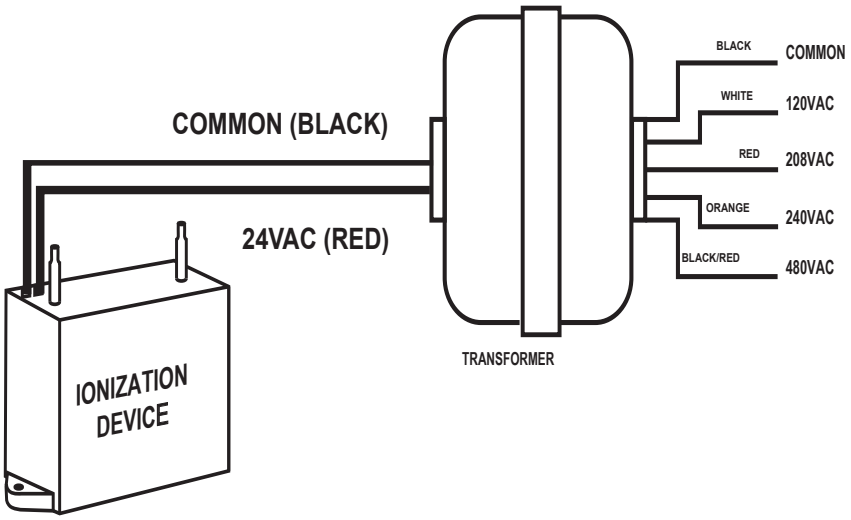

DUCT STATIC AND BUILDING PRESSURE - ULTRADRY OPTION

SCH-0017-O

REVISION: V05.02

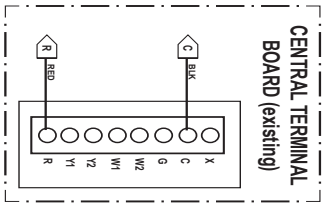

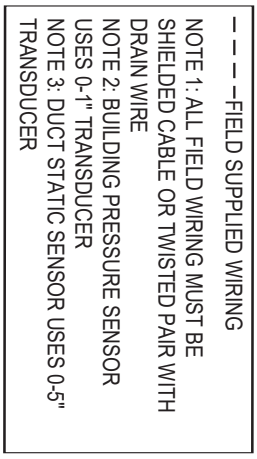

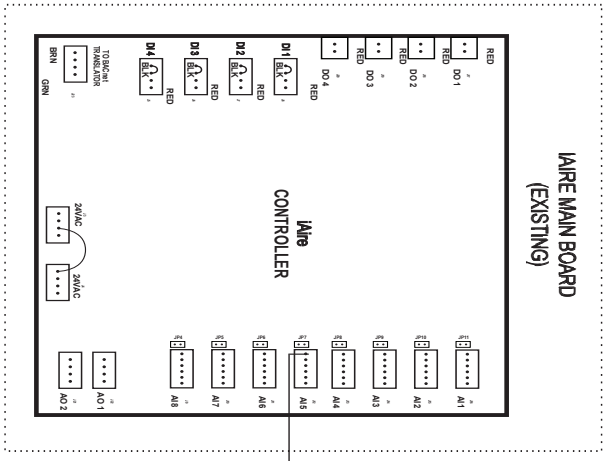

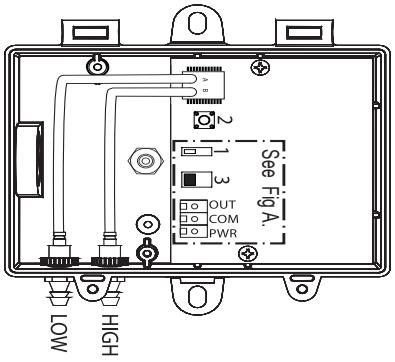

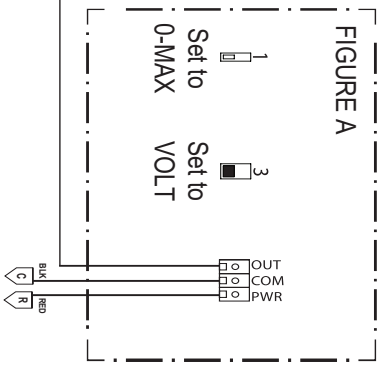

High Heat Box Wiring

SCH-0022-O

REVISION: V5.0.0.3

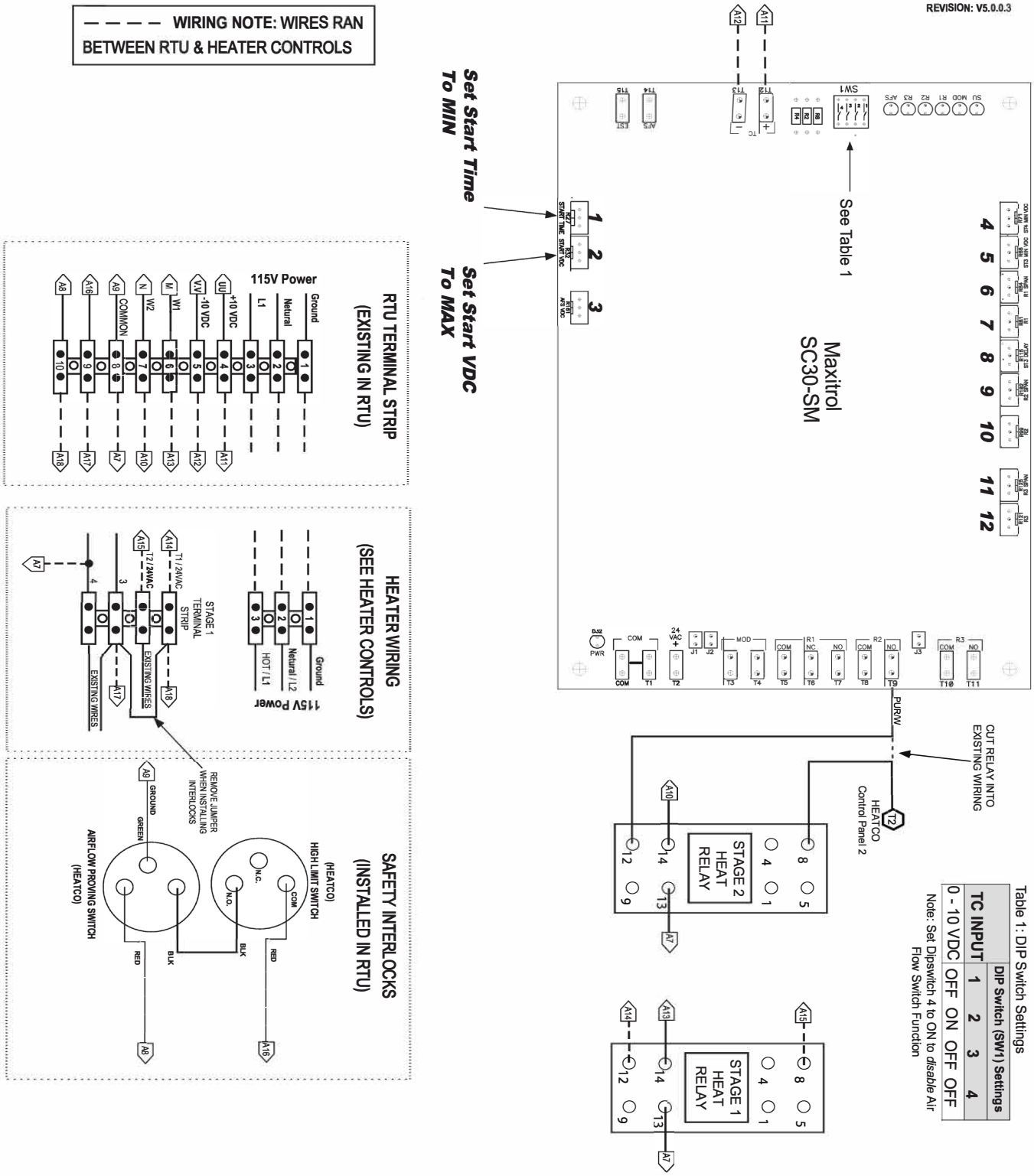

Table 1: DIP Switch Settings

TC INPUT	DIP Switch (SW1) Settings			
	1	2	3	4
0 - 10 VDC	OFF	ON	OFF	OFF

Note: Set Dipswitch 4 to ON to *disable* Air Flow Switch Function

Room Averaging Sensor Wiring - 5 Areas

SCH-0023-O

REVISION: V05.02

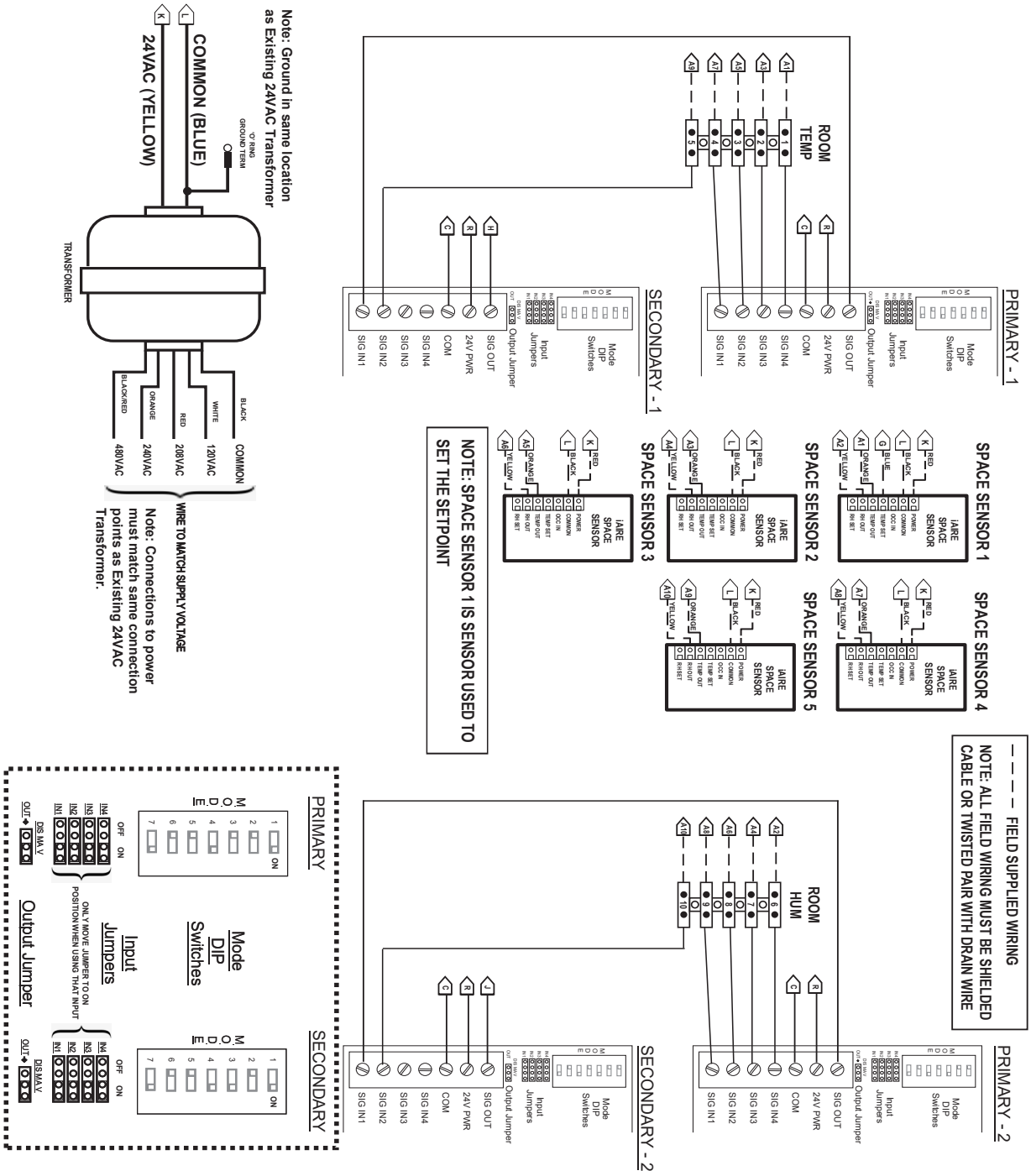

LOW AMBIENT SINGLE PHASE OUTDOOR FAN

SCH-0027-O

REVISION: V5.0.0.3

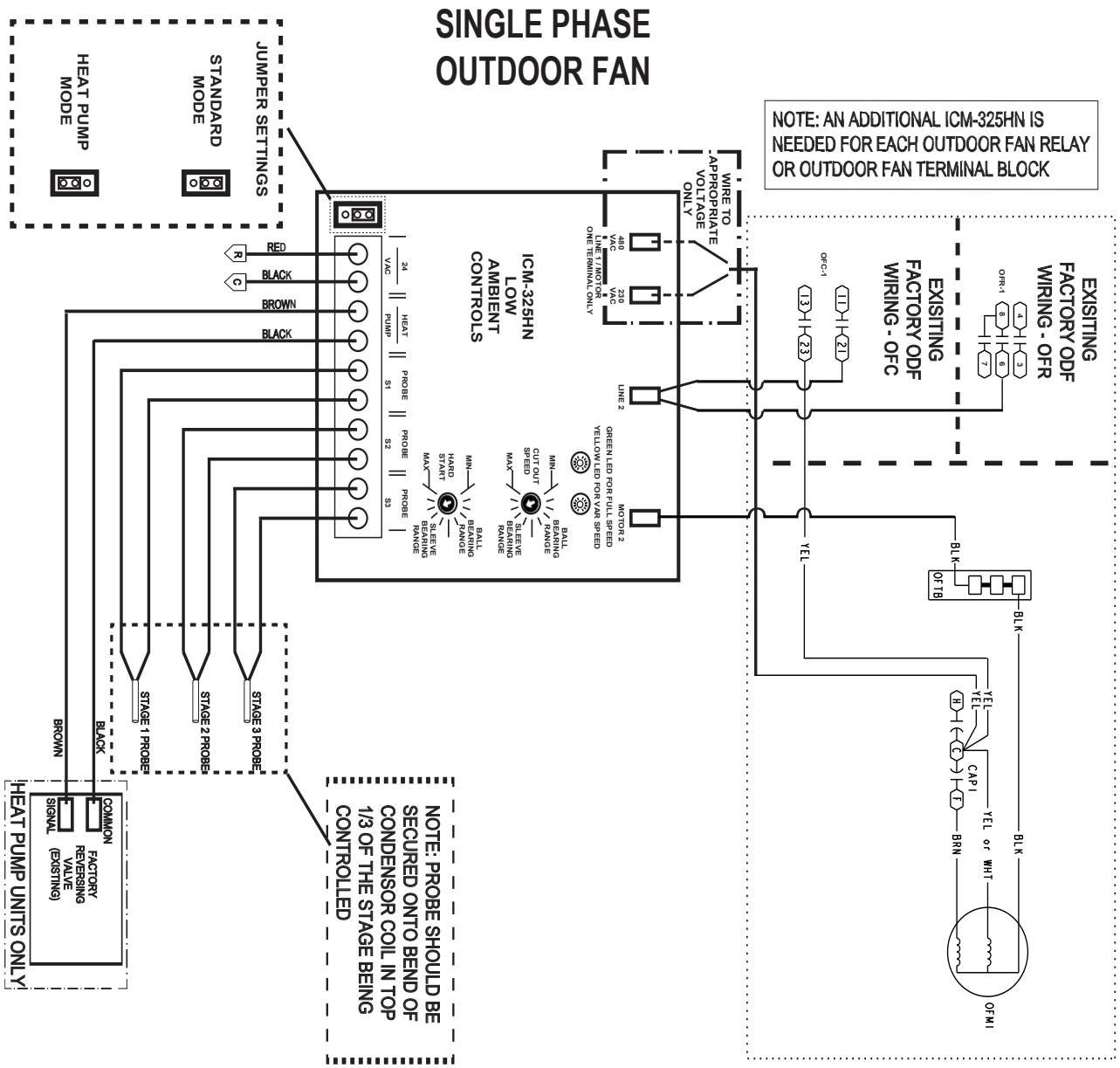

LOW AMBIENT - 3 PHASE FAN

SCH-0034-O

REVISION: V5.0.0.2

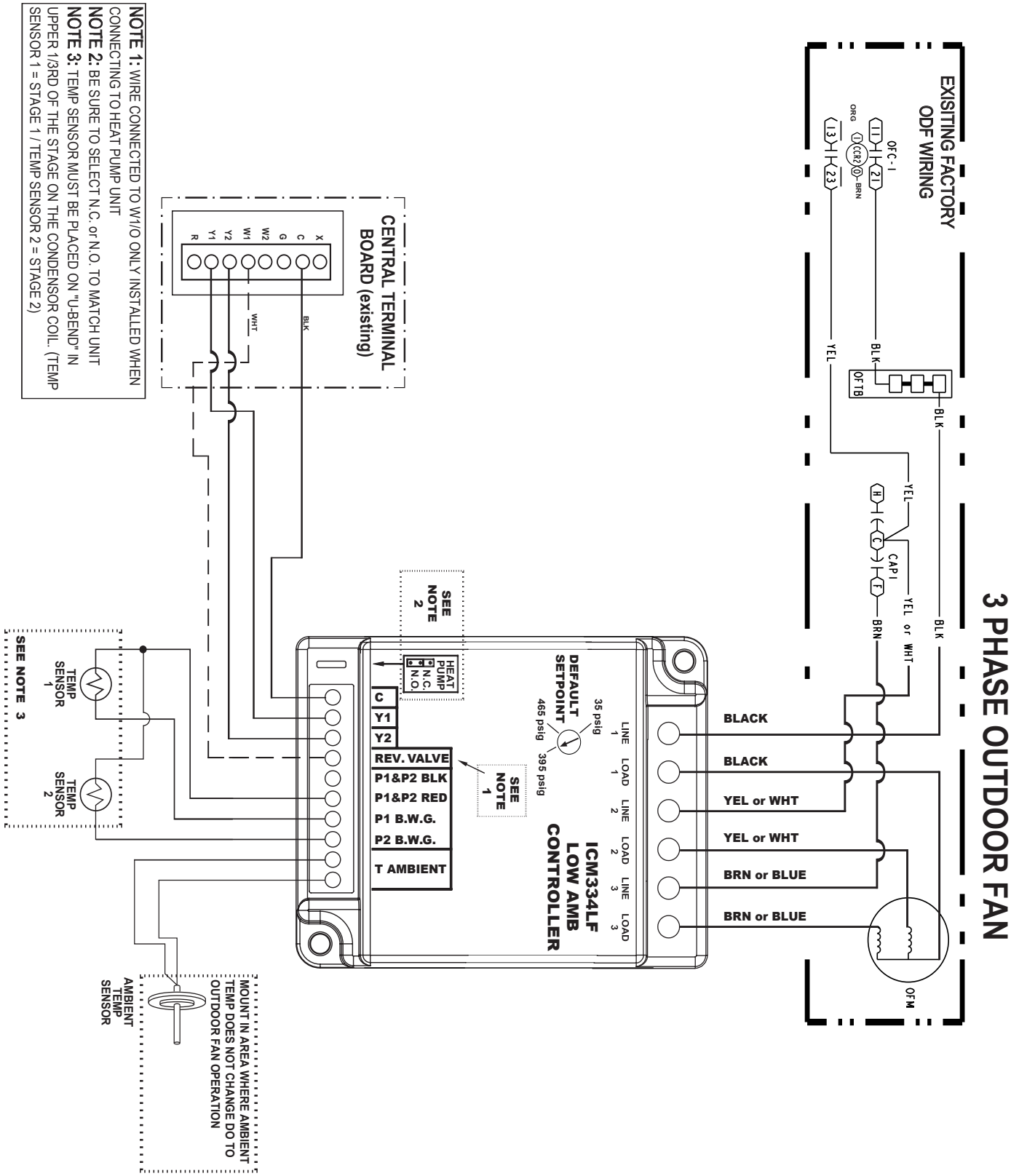

9. Troubleshooting

9.1. Control logic description

1. Display board button function

▲ button：check button、setting button“+”

▼ button：check button、setting button “-”

■ button：

A、Short press: force cooling mode， display board will show “dH”；

B、Long press： entering test mode, and you can change unit parameter manually：

When it show “Sc.”， then you can set Compressor Frequency manually, using “▲” and “▼”to change frequency.

Then press “■” button, display board will show “SF.”， then you can set fan speed manually, using “▲” and “▼”to change fan speed.

Then press “■” button, display board will show “SL.”， then you can set expansion valve open degree manually, using “▲” and “▼”to change expansion valve opening degree.

Then press “■” button, display board will show “SP.”，then you can set PFC switch manually,（0 means OFF，1 means ON）， using “▲” and “▼” to set PFC switch ；

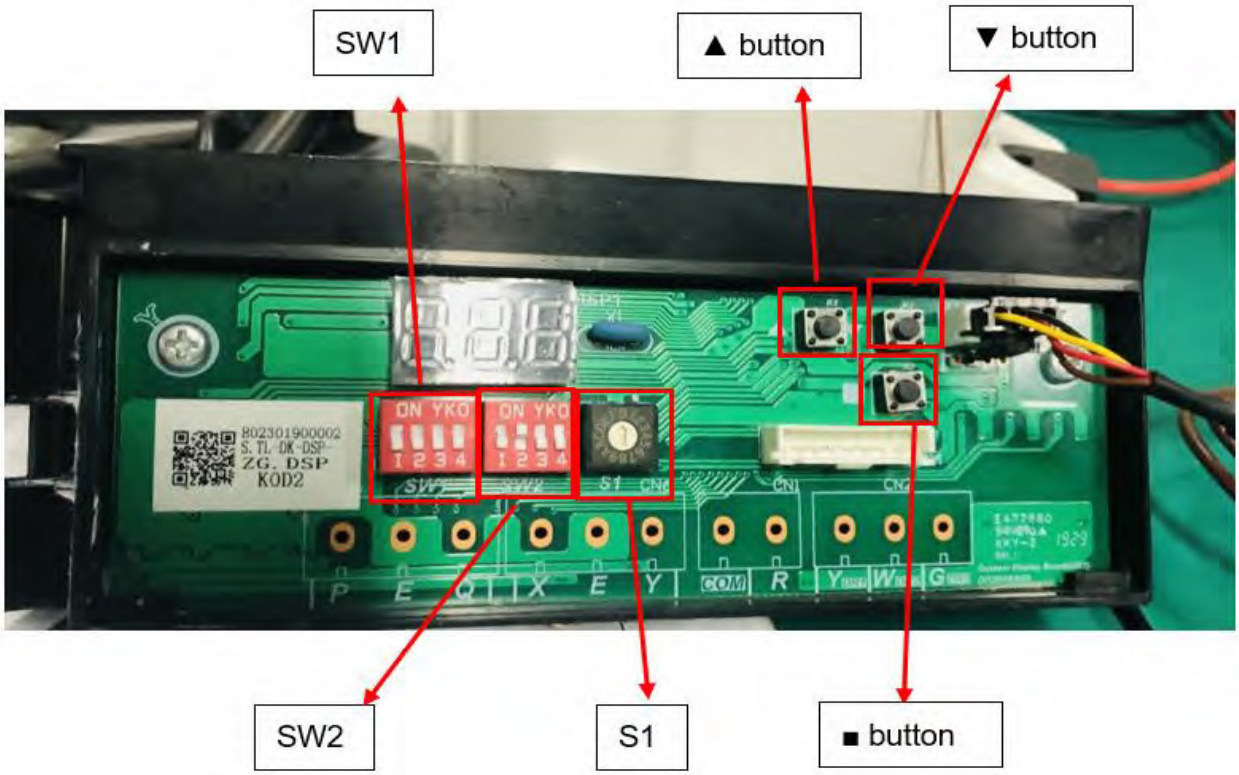

Troubleshooting (cont'd)

SW1:

1st bit	2nd bit	3rd bit	4th bit
Outdoor unit control logic(target evaporator temperature and target condensation temperature) setting, manufacture only.			ON: EXV throttling in cooling mode OFF: Piston throttling in cooling mode The function will be active after unit power off and power on.

SW2:

1st bit	2nd bit	3rd bit	4th bit
ON: Manually defrost. OFF: Automatic defrost The function will be active immediately after bit change.	ON: Display as Fahrenheit OFF: Display as Celsius The function will be active after unit power off and power on.	Reserved	ON: EXV throttling in heating mode OFF: Piston throttling in heating mode The function will be active after unit power off and power on.

S1: Reserved

Troubleshooting (cont'd)

9.2 Parameter point check table

1). Top discharge outdoor unit

For 24/36K model

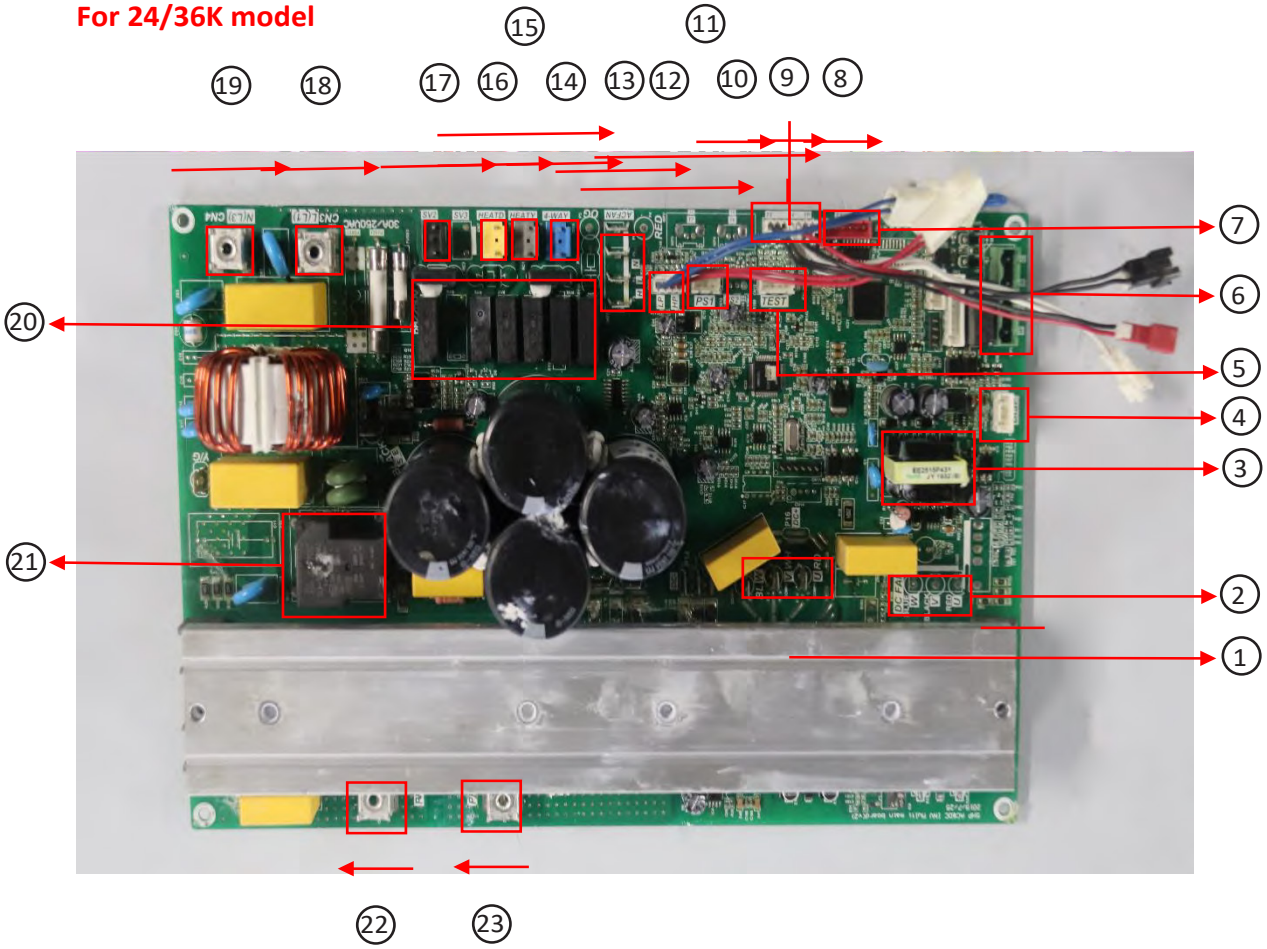

Function description for the corresponding position:

No.	Content	No.	Content
1	Compressor wiring terminal	12	High/Low pressure switch ports
2	DC fan motor wiring terminal	13	AC fan motor wiring terminal
3	Transformer	14	Four-way valve control port
4	Outdoor display board wiring terminal	15	Crankcase Heating zone control terminal
5	Reserved	16	Chassis Electric Heater control terminal
6	24V wire controller interface	17	Solenoid valve2 control terminal
7	EXV drive port	18	Power supply connecting terminal
8	Exhaust temperature sensor port(T5)	19	Power supply connecting terminal
9	Outdoor ambient temperature sensor port(T4)	20/21	Relay
10	Condenser temperature sensor port(T3)	22	Inductor wiring terminal 1
11	Pressure sensors ports	23	Inductor wiring terminal 2

Troubleshooting (cont'd)

For 48/60K model

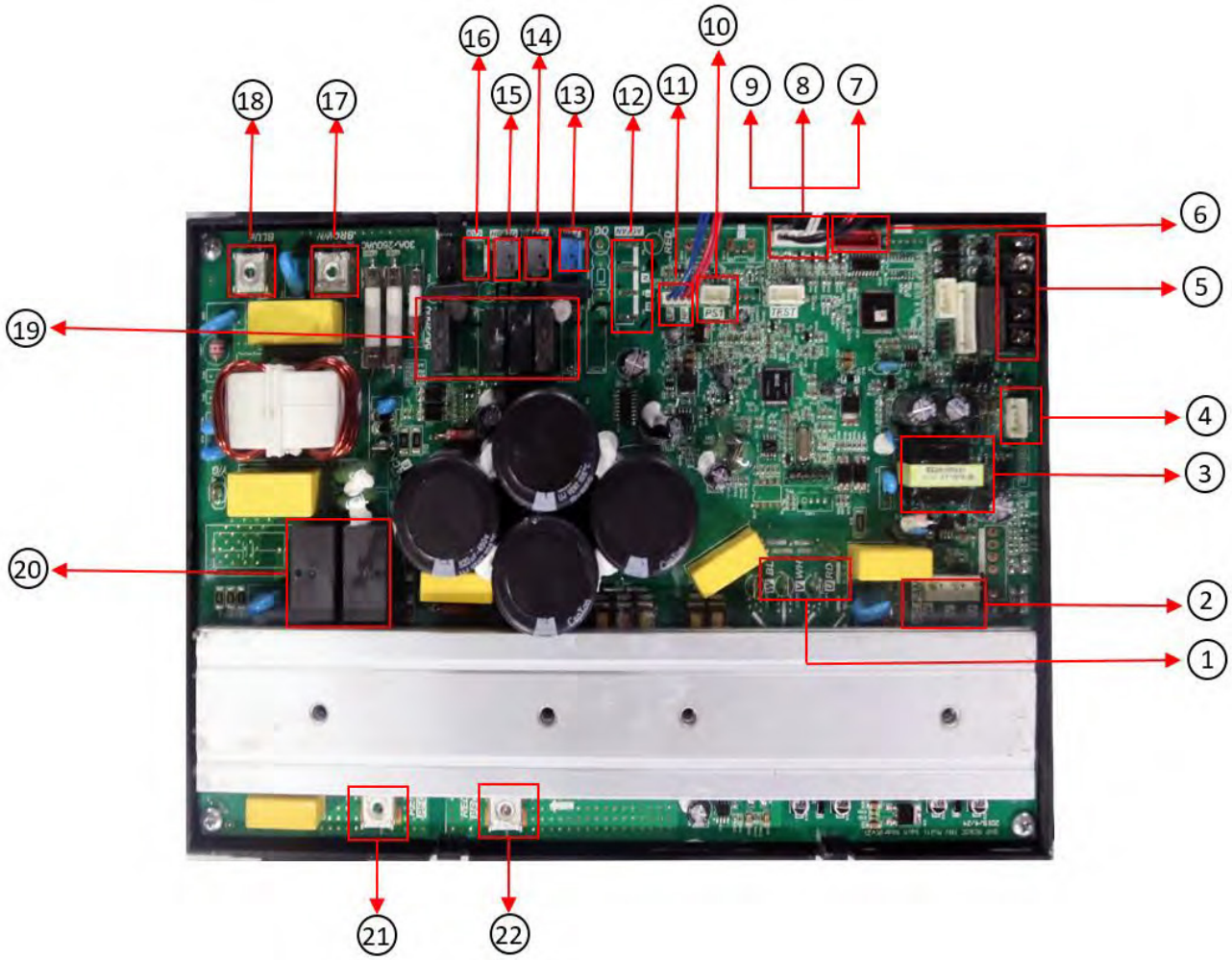

Function description for the corresponding position:

No.	Content	No.	Content
1	Compressor wiring terminal	12	AC fan motor wiring terminal
2	DC fan motor wiring terminal	13	Four-way valve control port
3	Transformer	14	Crankcase Heating zone control terminal
4	Outdoor display board wiring terminal	15	Chassis Electric Heater control terminal
5	24V wire controller interface	16	Solenoid valve control terminal
6	EXV drive port	17	Power supply connecting terminal
7	Exhaust temperature sensor port(T5)	18	Power supply connecting terminal
8	Outdoor ambient temperature sensor port(T4)	19	Relay
9	Condenser temperature sensor port(T3)	20	Relay
10	Pressure sensors ports	21	Inductor wiring terminal 1
11	High/Low pressure switch ports	22	Inductor wiring terminal 2

Troubleshooting (cont'd)

9.3 Error codes

CODE	FAULT DESCRIPTION
E4	T4 Outdoor ambient temperature sensor error
E5	T5 Discharge temperature sensor error
E6	T3 Condenser temperature sensor error
E9	AC under voltage protection
E10	EEPROM error
E12	IPM modular sensor error
E13	HLP Pressure sensor error
E14	T3 or T5 sensor disconnect error
E15	High pressure switch error
H0	Communication error of main chip and IPM chip
H1	T3 sensor high temperature error(In cooling mode) (20 times P5 error within 180mins)
H2	High pressure switch error(20 times P1 error within 150 mins)
H3	High pressure abnormal in heating mode (20 times P13 error within 180 mins)
H4	IPM modular high temp error (20 times P8 within 120 mins)
H5	Low pressure error (20 times P2 within 100 mins)
H6	Discharge temperature abnormal error(20 times P4 within 100 mins)
H7	Wet operation error (20 times P12 within 200 mins)
H8	T3 condenser sensor disconnect error (20 times E14 within 100 mins)
H12	Discharge temp sensor disconnect error(20 times E14 within 180 mins)
P1	High pressure protection
P2	Low pressure protection
P3	DC over current protection
P4	T5 Discharge temperature abnormal error
P5	T3 Condenser sensor high temp protection(In cooling mode)
P6	IPM module protection
P8	IPM high temperature protection (Ft)M high temperature protection (Ft)
P9	DC fan motor error
P12	Wet operation error
P13	High pressure abnormal error(In heating mode)
P14	High compression ratio protection
P15	Low compression ratio protection
L1	DC cable bus low voltage protection

Troubleshooting (cont'd)

9.3 Error codes continued

L2	DC cable bus high voltage protection
L4	MCE fault / sync / closed loop
L5	Zero speed protection
L7	Compressor phase loss protection ratio protection
L8	Compressor stalls
L9	Frequency limitation or decline by high pressure
LA	Frequency limitation by voltage
LC	Frequency limitation by condenser temp.
LD	Frequency limitation by discharge temp
LE	Frequency limitation by IPM modular high temp
LF	Frequency limitation by current
d0	Oil return
dF	Defrost
dH	Force cooling

Troubleshooting (cont'd)

9.4 Troubleshooting guidelines

E4/E5/E6 (T4/T5/T3 temperature sensors error)

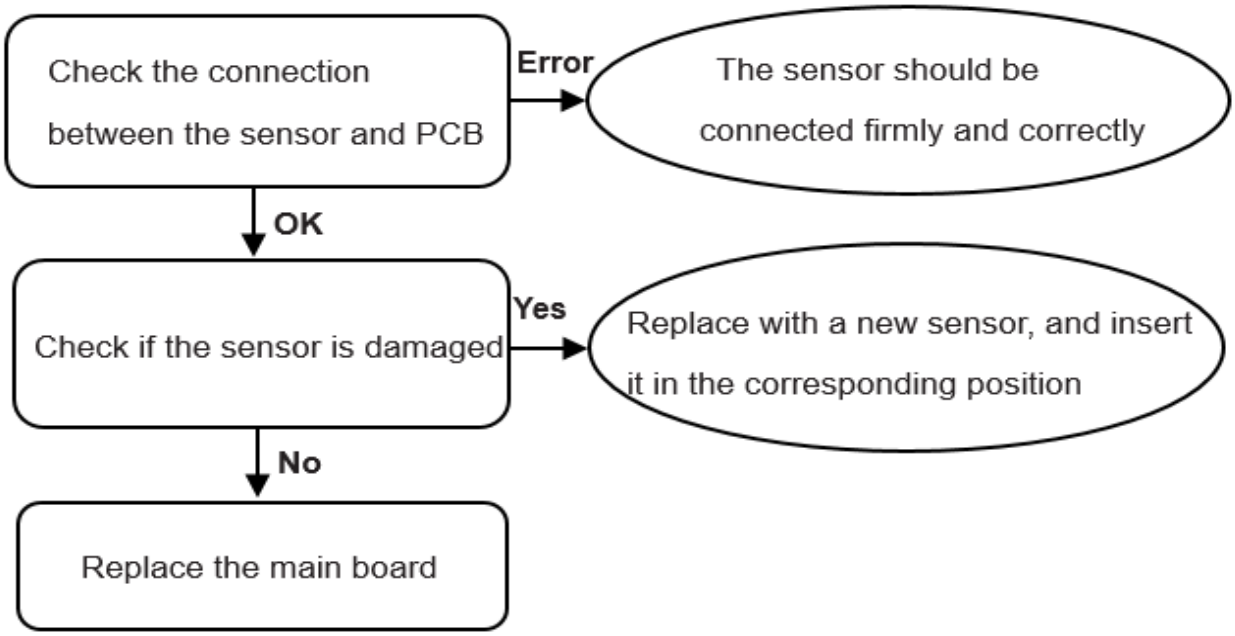

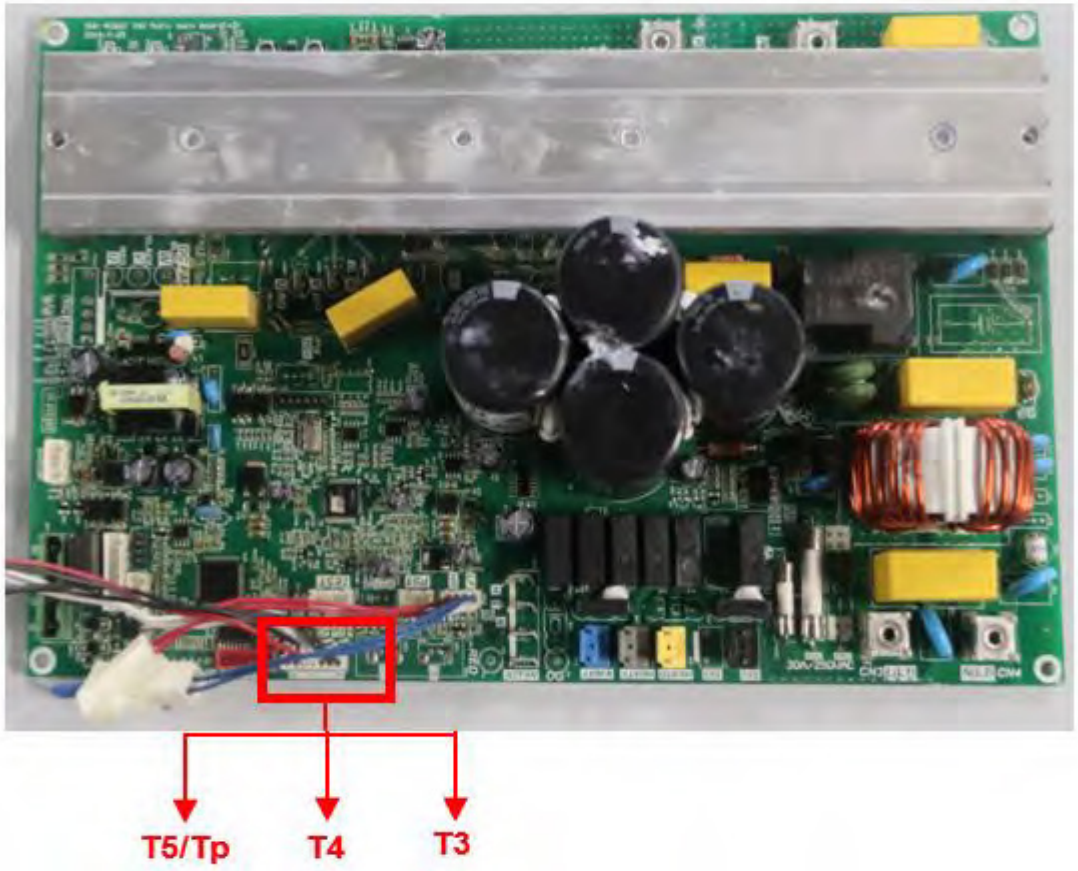

Troubleshooting (cont'd)

E9 (AC under voltage protection)

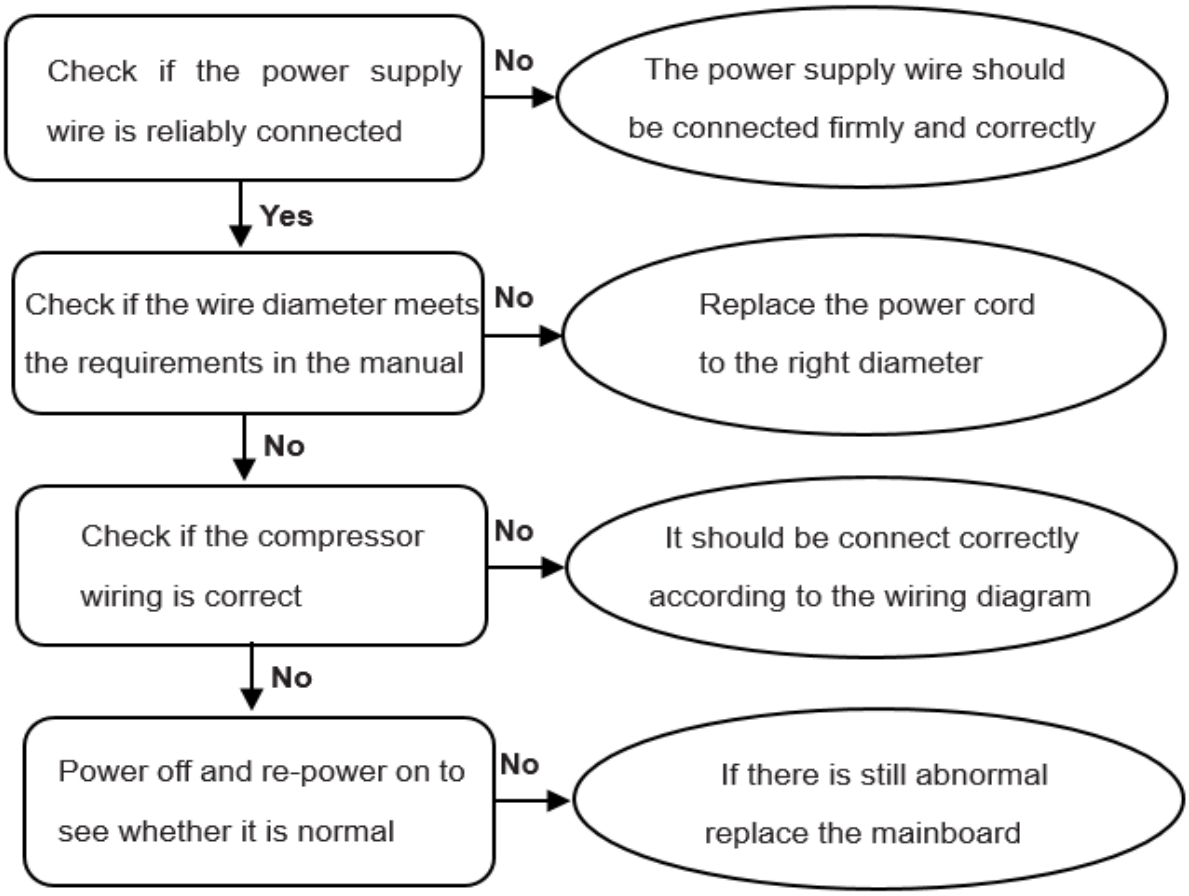

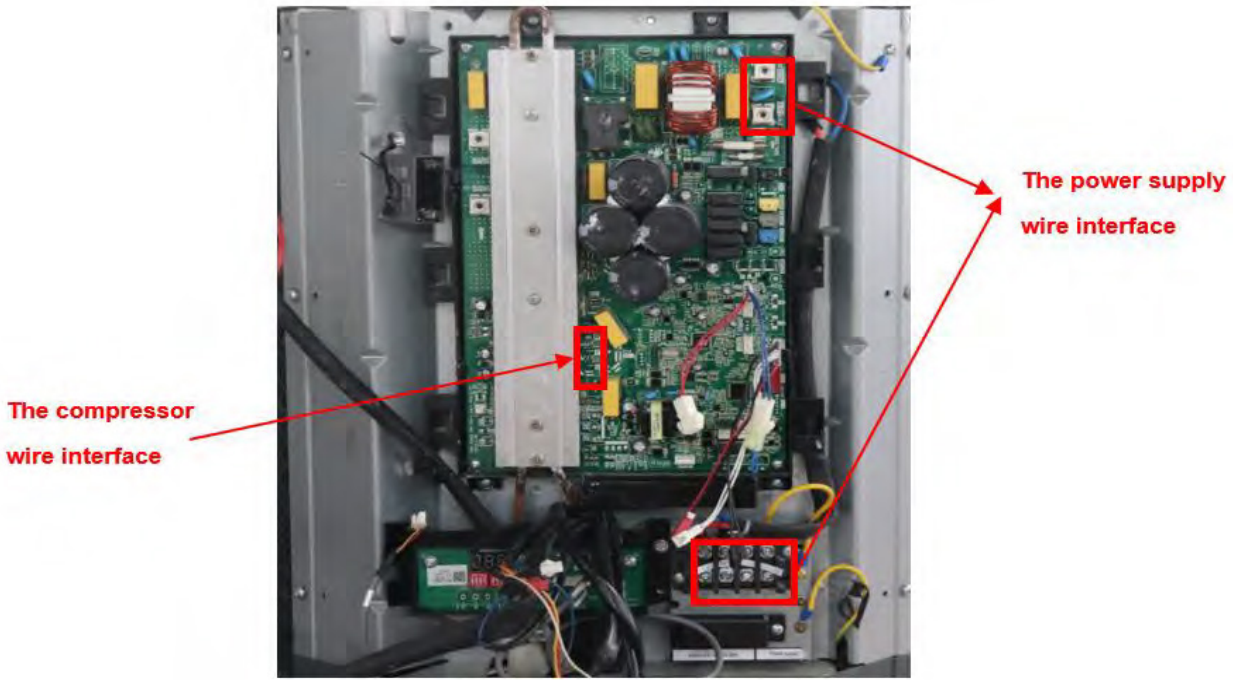

Troubleshooting (cont'd)

E10 (EEPROM failure)

Power off and re-power on to see whether it is normal → If there is still abnormal replace the mainboard

E12 (IPM modular sensor error)

Power off and re-power on to see whether it is normal → If there is still abnormal replace the mainboard

E13 (HLP Pressure sensor error)

Check the connection between the sensor and PCB → Error → The sensor should be connected firmly and correctly

↓ OK

Measure the value of outdoor unit pressure sensor Compare it with the pressure value of the pressure gauge → If the difference is large, replace with a new sensor, and weld in the correct position

↓

If the difference is small, replace the mainboard

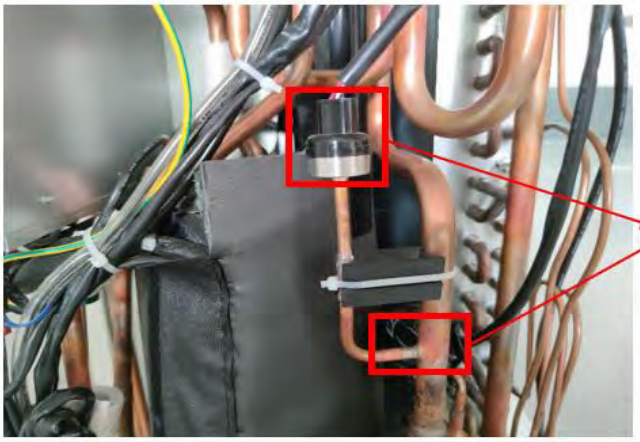

The pressure sensor should be soldered in the correct position

Troubleshooting (cont'd)

E14/H8/H12 (T3 or T5 sensor disconnect error)

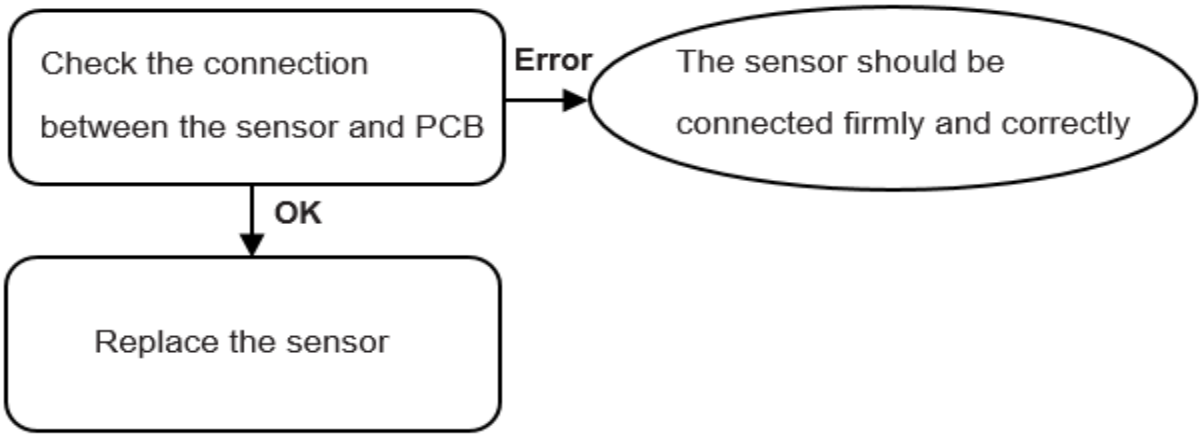

E15 (High pressure switch error)

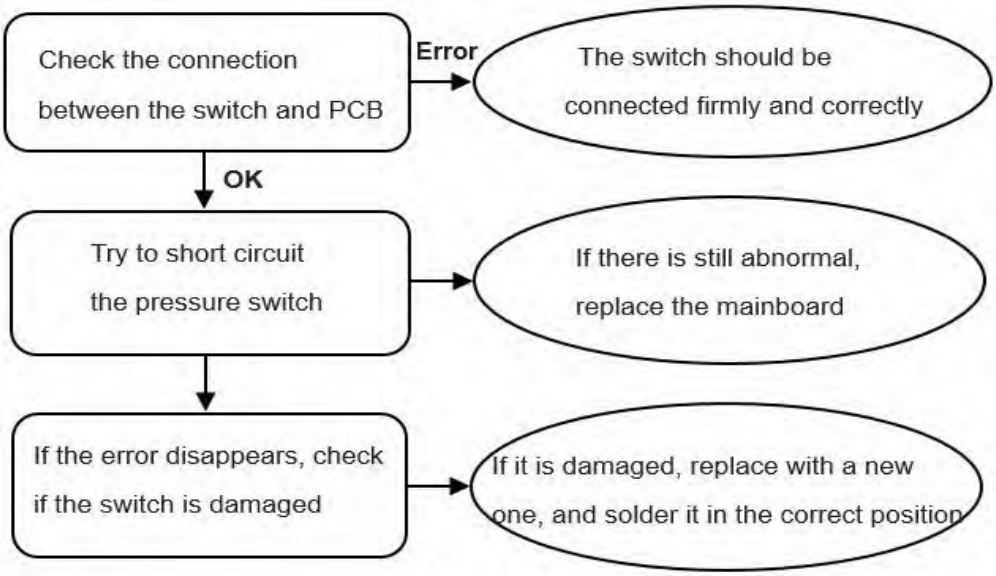

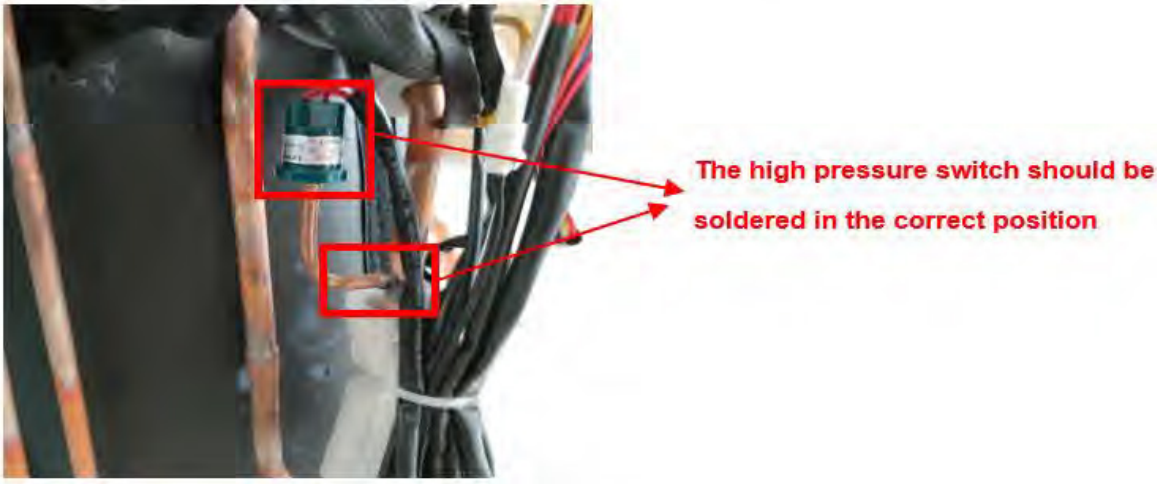

Troubleshooting (cont'd)

H0 (Communication error of main chip and IPM chip)

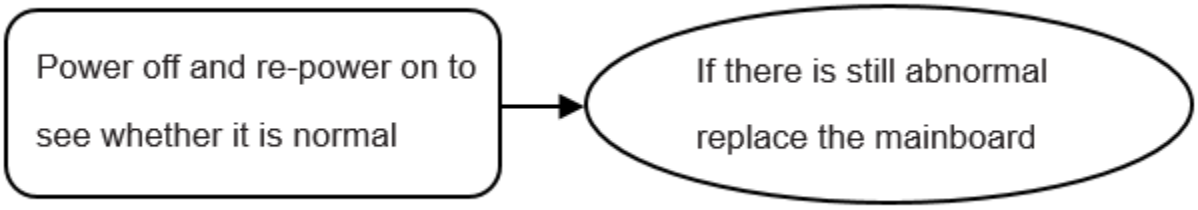

P1/H2 (High pressure switch protection)

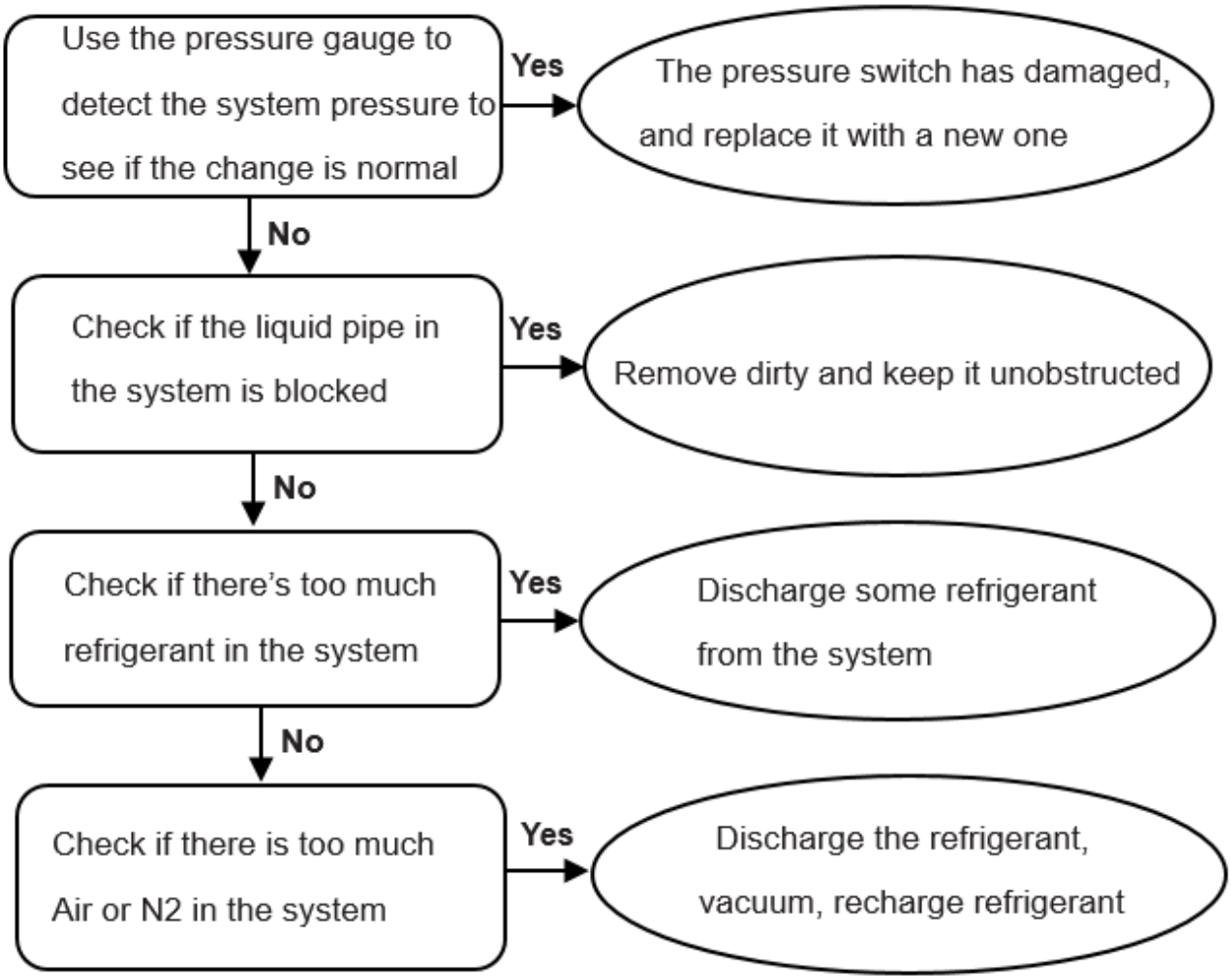

Troubleshooting (cont'd)

P2/H5 (Low pressure switch protection)

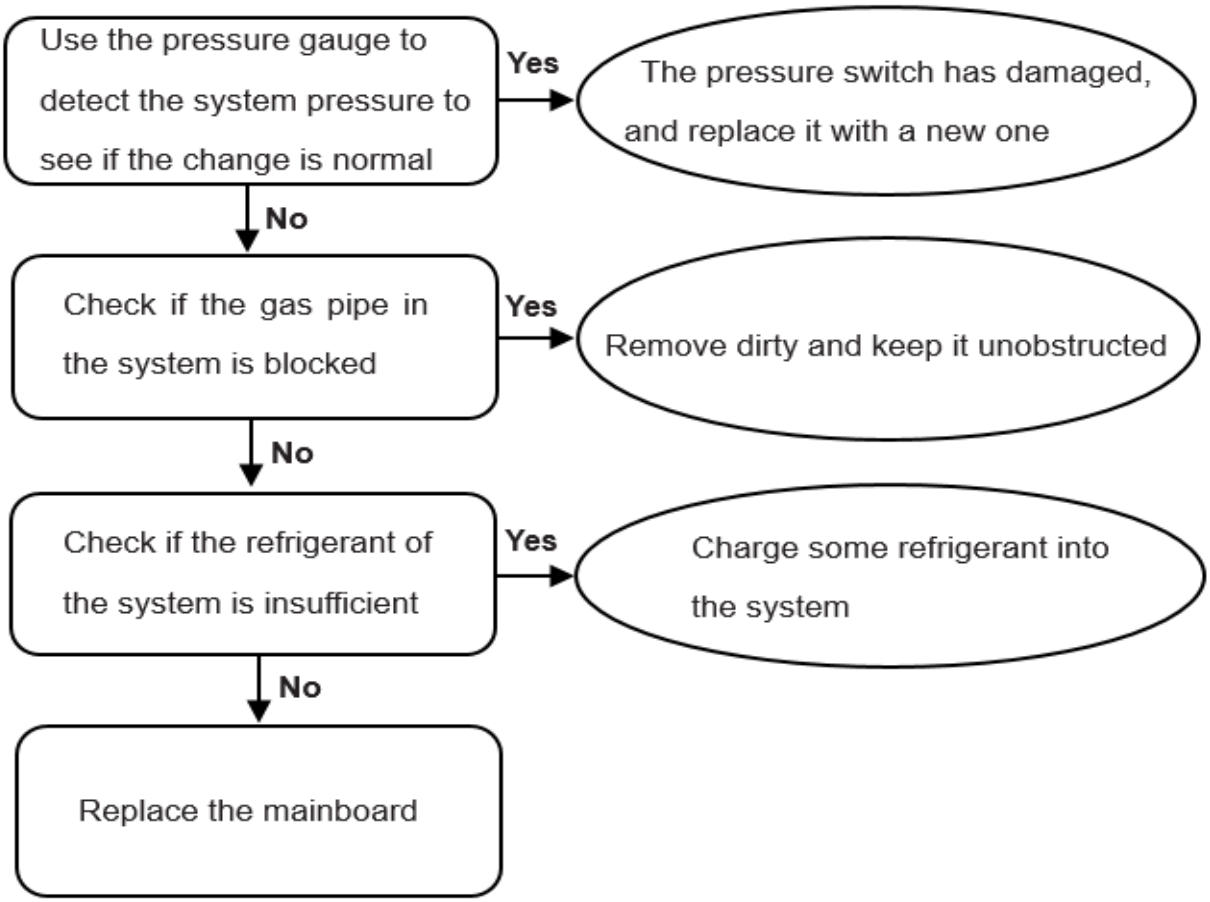

P3(Inverter over current protection)

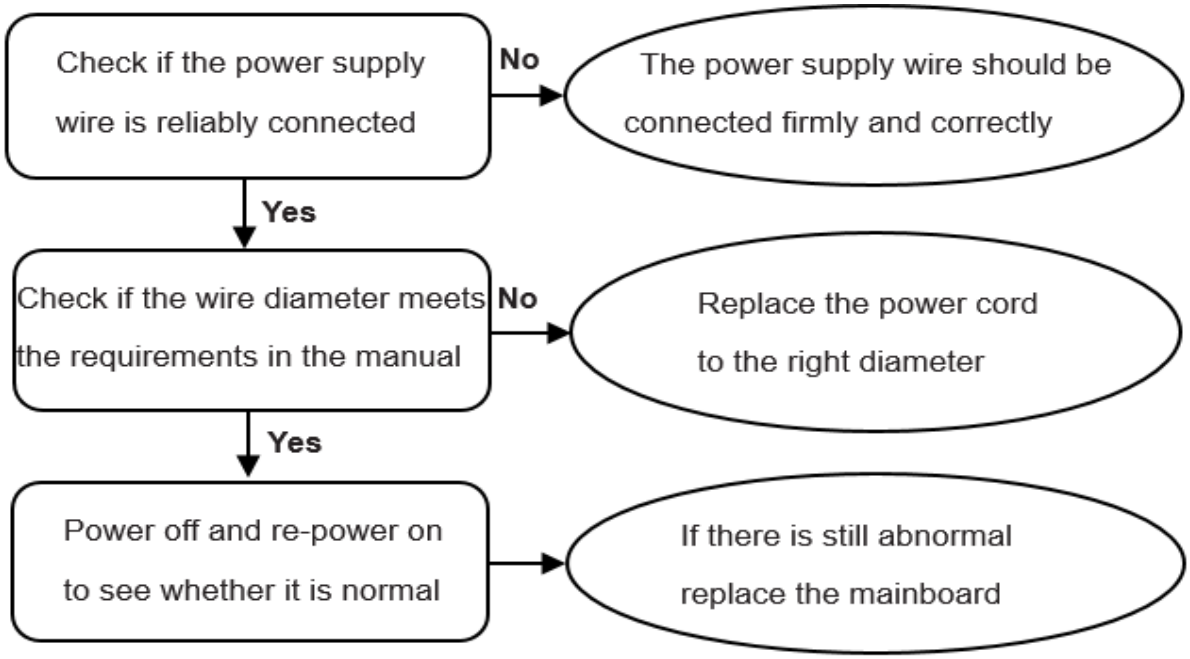

Troubleshooting (cont'd)

P4/H6 (T5 Discharge temperature abnormal error)

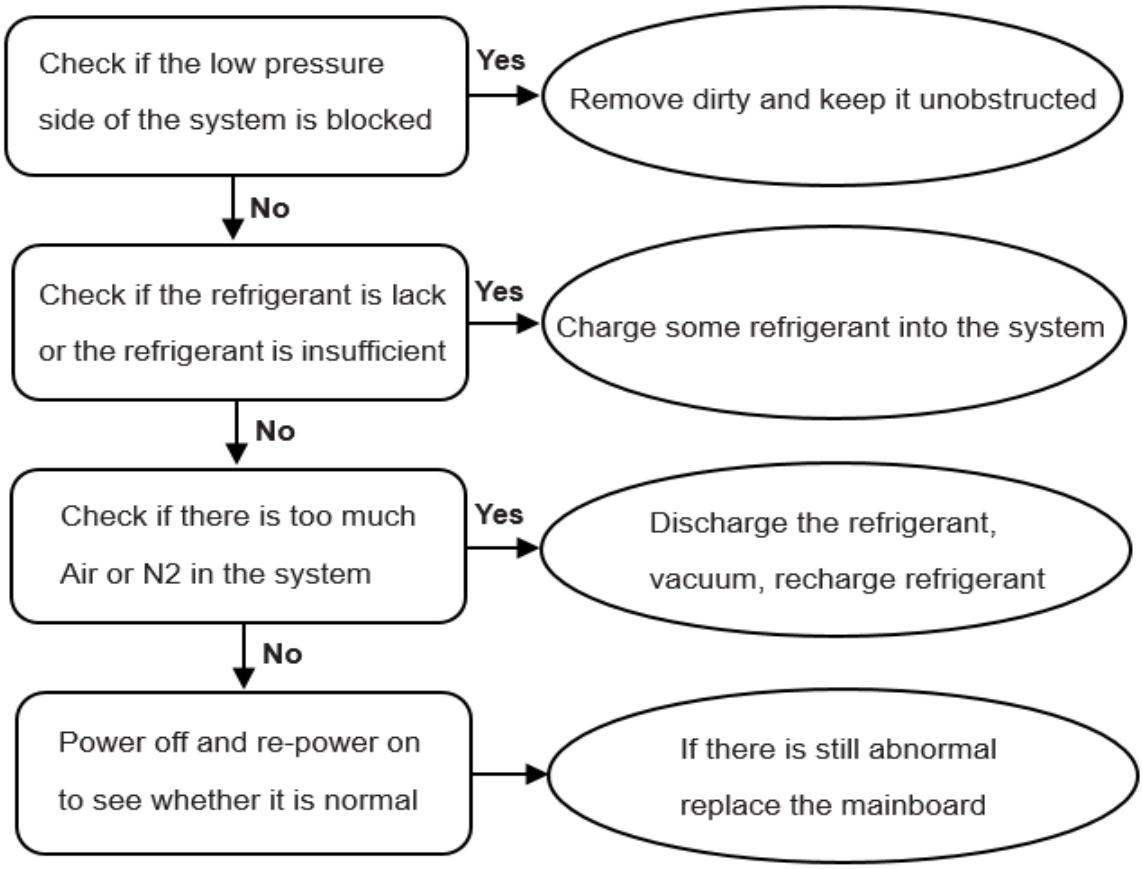

P5/H1(T3 condenser sensor high temp protection)

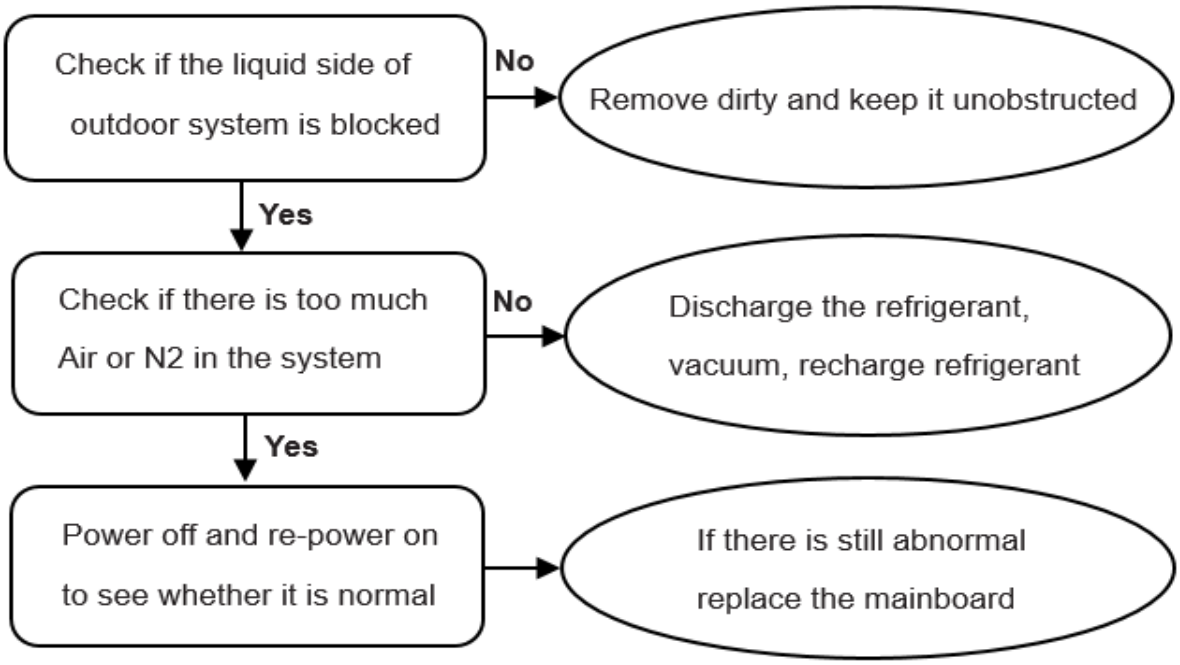

Troubleshooting (cont'd)

P6 (IPM module protection)

Power off and re-power on to see whether it is normal → If there is still abnormal replace the mainboard

P8/H4 (IPM high temperature protection)

Re-power on to measure the temperature of the IPM board Observe the temperature change → If the temperature changes normally, but the final temperature is too high, remove the IPM heat sink cover plate, apply heat dissipation silicone grease evenly again, then tighten the screws to fasten the cover plate

↓ **No**

Replace the mainboard

Troubleshooting (cont'd)

P9 (DC fan motor error)

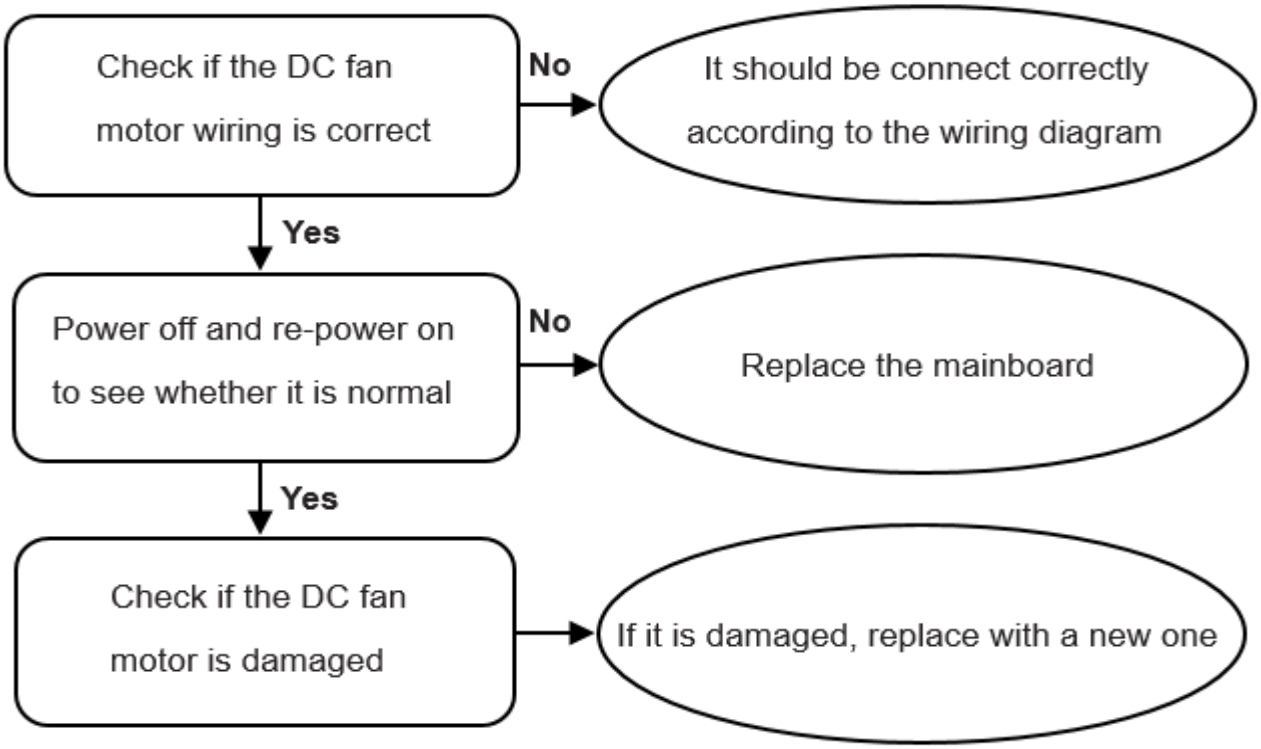

Troubleshooting (cont'd)

P12/H7 (Wet operation error)

Power off and re-power on to see whether it is normal

P13/H3(High pressure abnormal error-In heating mode)

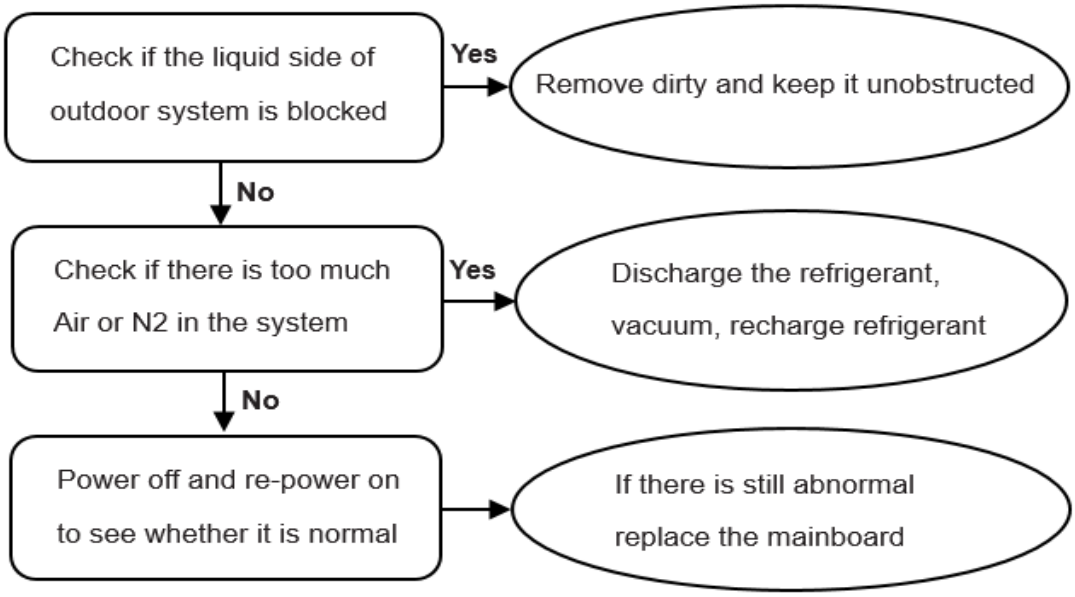

P14 (High compression ratio protection)

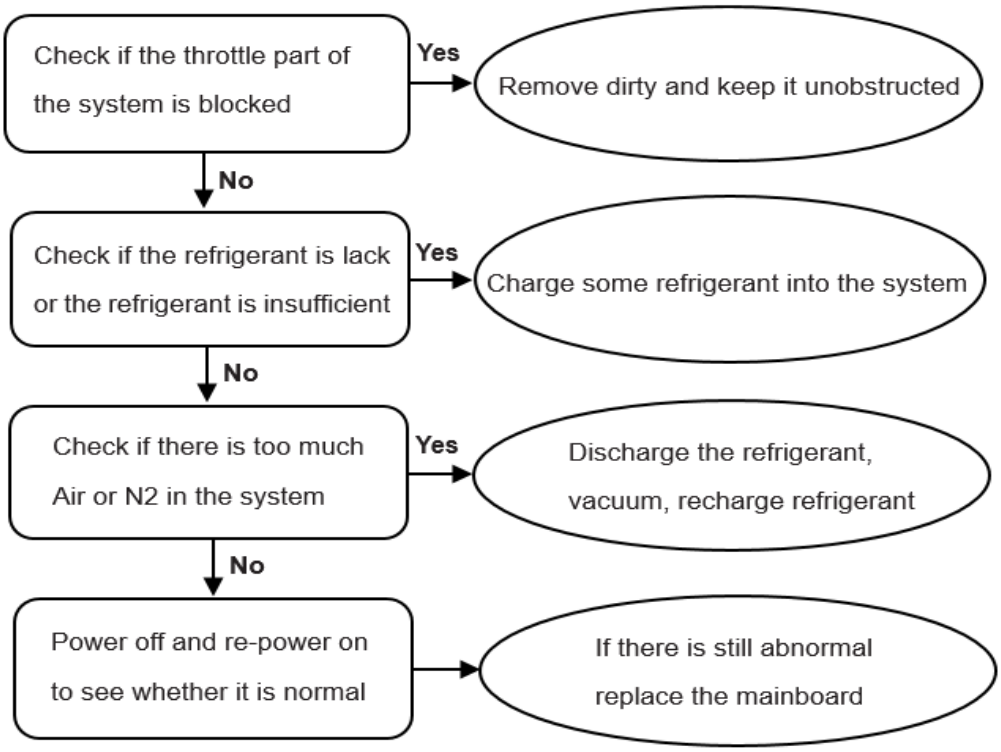

Troubleshooting (cont'd)

P15 (Low compression ratio protection)

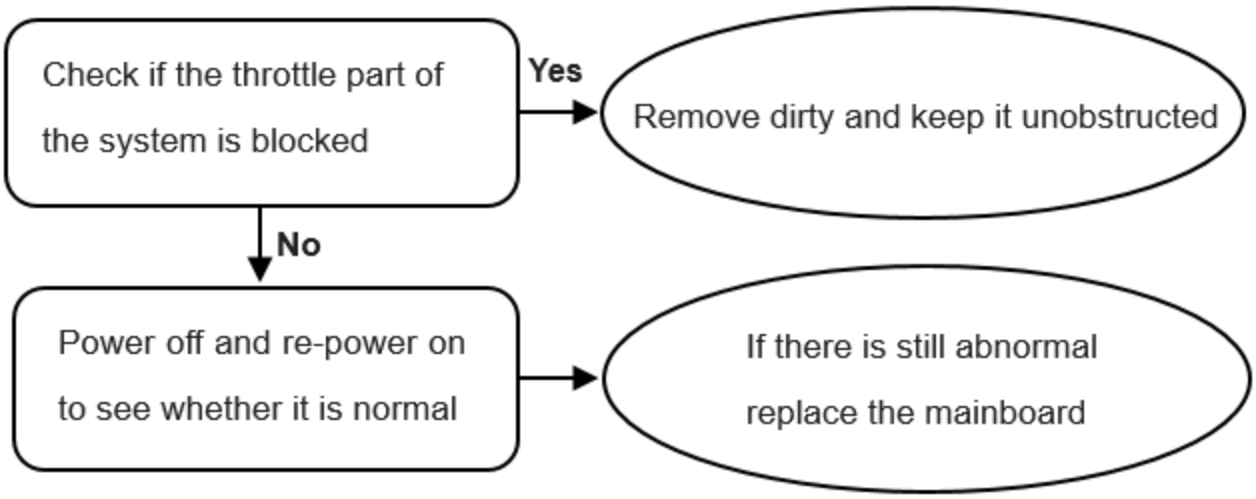

L1/L2(DC cable bus low/high voltage protection)

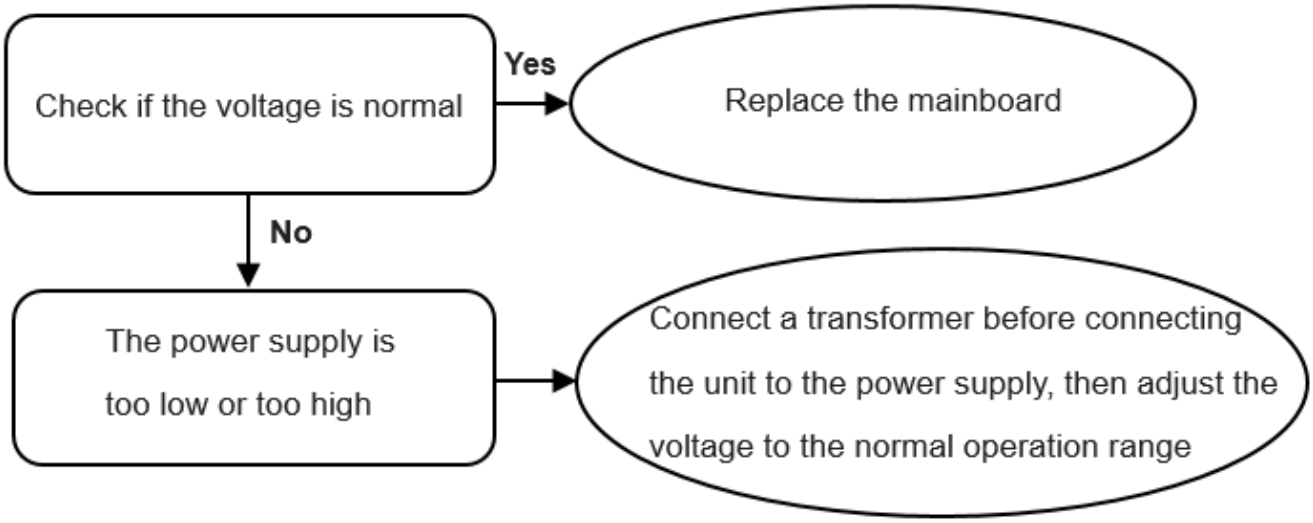

L4-L8 (IPM module subdivision protection)

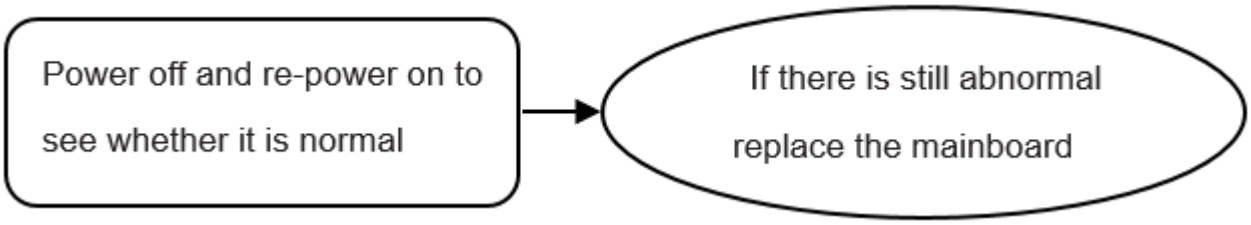

L9-LE (Frequency limitation protection, not error）

SEE IOM-0035 O/M APPENDICES MANUAL FOR MORE INFORMATION ON INSTALLATION AND SET UP OF PERIPHERAL DEVICES

NOTES: