Thermostat Control

outside air solutions

O/M manual

PD 05/18/2022- v 1.04
PN IOM-0034

Table of Contents

PART NUMBER AND DESCRIPTIONS 3-5
START UP REQUIREMENTS 6
REFRIGERANT PIPING GUIDELINES 7
CONTROLS DESCRIPTION 8-9
TROUBLESHOOTING 10
SEQUENCE OF OPERATIONS 11
VICONICS THERMOSTAT NAVIGATION 12
THERMOSTAT DEFAULT SETTINGS TABLE 13-18
WIRING DIAGRAMS 20-23
BACNET POINTS LIST 24
PLUMBING/PIPING DIAGRAM 25-26
OPTIONS WIRING DIAGRAMS 27-36
NOTES 37-38

Contact iAIRE At:

www.myiaire.com

Email: sales@myiaire.com
Phone: 844-348-9168

ultraDRY Part Numbering Scheme

Commercial Package / Splits

12C- 2 3 4 5 6 7 8 9 10 11 12 13 - 14

Type (1,2)

UD - Cooling Only
UG - with Gas Heat
UH - DX Cool w/H.W. Coils
UP - with Heat Pump
UW - WSHP

Fan (4)

L - Low/Std. Static
M - Med. Static
H - High Static
E - Extra High Static

Voltage (5)

G - 230 VAC 1Φ
H - 230VAC 3Φ
K - 460VAC 3Φ
L - 575VAC 3Φ

Control (6)

0 - No Controls
A - DAT w/ VAV Duct
B - DAT w/ VAV Bldg
C - Thermostat w/ VAV Duct
D - DAT Control
E - Process w/ VAV Duct
F - Process w/ VAV Bldg
H - Thermostat w/ VAV Bldg
P - Process Control
S - Space (ERV only)
T - Thermostat Control
U - Space w/ VAV Duct (ERV only)
V - Space w/ VAV Bldg (ERV only)

Electric & Gas Heat (7,8,9)

XXX - Electric (kW)
XXX - Gas (mBH)

Heat Stages (10)

A - No Controls
B - 1 Stage
C - 2 Stage
D - 3 Stage
E - 4 Stage
M - Modulating

Roof Top Units (3)

TC08	TC18	FC04
TC09	TC21	FC05
TC12	TC25	FC06
TC14	TC29	FC07
TC16	HC07	GC04
TC17	HC08	GC05
TC20	HC09	GC06
TC24	HC11	A30
TC28	HC12	A35
TC30	HC14	A40
P70	HC17	A50
P75	HC20	A60
P90	HC24	VQP72
P100	HC28	VQP96
N75	HQP72	VQP120
N90	HQP96	VQP151
N105	HQP120	VQP181
N120	HQP150	VQP210
N130	HQP180	VQP240
N150	HQP242	VQP300
		VQP360

Disconnect (11,12)

00 - No Disconnect
01 - 240V - 30A Fuse
02 - 240V - 60A Fuse
03 - 240V - 100A Fuse
04 - 240V - 150A Fuse
05 - 240V - 200A Fuse
06 - 240V - 300A Fuse
11 - 240V - 30A Switch
12 - 240V - 60A Switch
13 - 240V - 100A Switch
14 - 240V - 150A Switch
15 - 240V - 200A Switch
16 - 240V - 300A Switch
21 - 600V - 30A Fuse
22 - 600V - 60A Fuse
23 - 600V - 100A Fuse
24 - 600V - 150A Fuse
31 - 600V - 30A Switch
32 - 600V - 60A Switch
33 - 600V - 100A Switch
34 - 600V - 150A Switch

Comm. Split (3)

COOLING	HEAT PUMP
AZ07RA07*	AQ07RQ07*
AZ08RA08*	AQ08RQ08*
AZ12RA12*	AQ12RQ12*
AZ14RA14*	AQ16RQ16**
AD12RA12**	AQ25RQ25**
AD14RA14**	
AD16RA16**	
AD25RA25**	
AP25RA30**	
AP27RA30**	
AP30RA30**	

*one circuit
**two circuit

Configuration (13)

A - Down Supply / Down Return
B - Horizontal Supply / Down Return
C - Down Supply / Horizontal Return
D - Horizontal Supply / Horizontal Return

WTR SRC CONFIG ONLY

E - Top Discharge / Rear Return
F - Top Discharge / Front Return
G - Front DIscharge / Rear Return
H - Rear Discharge / Front Return
I - Right Discharge / Left Return
J - Back Discharge / Left Return
K -Left Discharge / Right Return

Res. Split (3)

COOLING	HEAT PUMP
AB36FB6	HC36FB6
AB48FB6	HC48FB6
AB60FB6	HC48FB6
AC36FB6	HC60FB6
AC42FB6	
AC48FB6	
AC60FB6	

Options (14)

0 - No Options
A - Ionization
B - Whole Unit (UG)
C - All Coils (UG)
D - Condenser Coil (UG)
E - ERV (See options pg.2)
F - MERV 13 4" Filter
G - 2 Pos. OA Damper
H - BACNet
J - Hinged Access Doors
K - DW w/ Poly Insulation
L - SS Drip Pan
M - SS Gas Heat Exchanger
N - Dirty Filter Switch
P - Service Outlet (non-pwr)
Q - Service Outlet (pwr)
R - Split Power Fuse Disc.
S - Split Power Switch Disc.
T - Smoke SA
U - Smoke RA
V - Low Ambient Bypass
W - Economizer
X - Intertwined Evap. Coil
Y - Start Up
1 - 365 Day Annual Timer
2 - SOLAR HVAC
3 - Condensate Flow Switch
4 - Airflow Monitoring
5 - Hail Guard
6 - Fixed Powered Exhaust
7 - Phase Monitor
8 - Modulating Powered Exhaust
9 - Crate

ERV Options (if ERV selected on page 1)

- 15 16 17 18

Wheel Diameter (15,16)
19 - 19”
25 - 25”
30 - 30”
36 - 36”
41 - 41”
46 - 46”
52 - 52”
58 - 58”
64 - 64”

Airflow Capability (17)
L - Low
H - High

Options (18)
0 - No Options
A - 2 Position Outside Air Damper
B - 2 Position Exhaust Air
C - Building Pressure
D - Outside Airflow Monitoring
H - Supply Air FIlter Status
J - Exhaust Air FIlter Status
K - Supply Air Blower Status
L - Exhaust Air Blower Status
M - With OA Blower
N - Sensible Wheel
P - Frost Protection

ultraDRY NUMBERING SCHEME INSTRUCTIONS

How to Translate ultraDRY Part Numbering Schemes

ultraDRY's part numbering scheme is composed of similar product identification, when compared to Carrier, in order to easily provide common options and features. By referencing the 2 character "type" in the beginning of each part number, it is easy to distinguish cooling only, gas heat, or heat pump models. A full list of Carrier unit model numbers is provided from by following the link in the web addresses listed above. Using the comparison below, an excerpt is provided from Carrier's technical guide to illustrate how a common unit can be traced from ultraDRY to Carrier.

Asterisk

All part numbers and part number references will use an asterisk, * , to designate all characters which do not apply to the part number for the information being provided in that section. Where an asterisk appears in the middle of a part number, the missing characters are irrelevent to the inormation being provided. Where the asterisk appears at the end of a part number, the remaining part number characters are irrelevent to the information being provided.

To determine the specific Carrier unit you need, see below for how to determine which Carrier manual you will need.

For more information about Carrier Commercial Split Units go to: **http://www.carrier.com/building-solutions/en/us/products/split-systems/split-systems/**

For more information about Carrier Commercial Units go to: **http://www.carrier.com/building-solutions/en/us/products/packaged-outdoor/outdoor-packaged-units/**

For more information about Carrier Residential Units go to: **http://www.carrier.com/homecomfort/en/us/products/heating-and-cooling/packaged-products/**

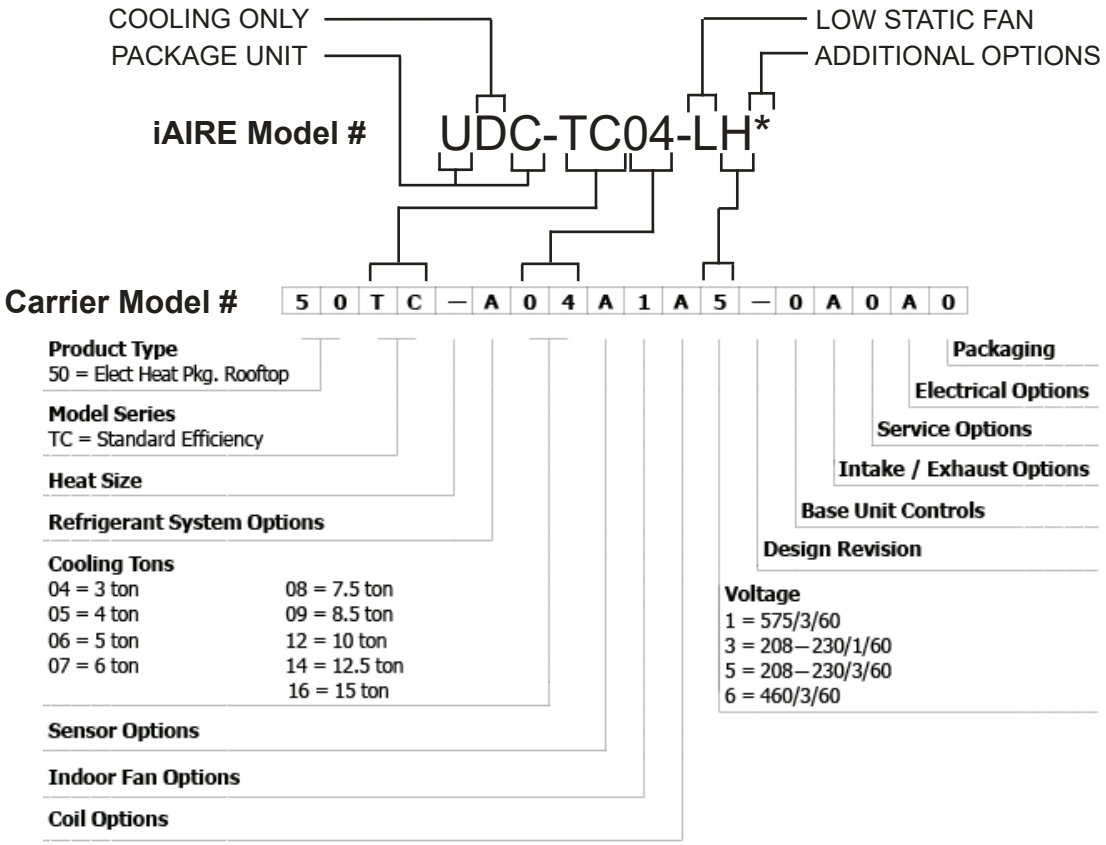

START-UP REQUIREMENTS
! IMPORTANT !

To maintain factory warranty, all units must have an authorized factory start-up and the start-up paperwork on file

For Questions, Contact iAIRE At:

www.myiaire.com

Email: sales@myiaire.com
Phone: 844-348-9168

Fill out Start-Up request form here:

https://www.myiaire.com/support-service/service-request/

REFRIGERANT PIPING GUIDELINES

IMPORTANT: The information below is intended for general information on refrigerant piping only. Reference specific AHU and condensing units manuals for specific piping details.

The design of a refrigerant piping system should:

Ensure proper refrigerant feed to evaporators; Provide practical refrigerant line sizes without excessive pressure drop; Prevent excessive amounts of lubricating oil from being trapped in any part of the system; Protect the compressor at all times from loss of lubricating oil; Prevent liquid refrigerant or oil slugs from entering the compressor during operating and idle time; and Maintain a clean and dry system.

REFRIGERANT LINE VELOCITIES

Economics, pressure drop, noise, and oil entrapment establish feasible design velocities in refrigerant lines. These are:
Suction line - 700 to 4,000 fpm
Discharge line - 500 to 3,500 fpm
Condenser drain line - 100 fpm or less
Liquid line - 125 to 450 fpm

Minimum Discharge- Line Velocities		
Refrigerant Velocity, fpm		
Nominal Pipe Size, in.	Riser	Horizontal
7/8	375	285
1-1/8	430	325
1-3/8	480	360
1-5/8	520	390
2-1/8	600	450

Higher gas velocities are sometimes found in relatively short suction lines on comfort air conditioning or other applications where the operating time is only 2,000 to 4,000 hrs per year and where the low initial cost of the system may be more significant than low operating cost.

Industrial or commercial refrigeration applications, where equipment runs almost continuously, should be designed with low refrigerant velocities for the most efficient compressor performance and low equipment operating cost.

The liquid line from the condenser to the receivers should be sized for 100 fpm or less to ensure positive gravity flow without incurring a backup of liquid flow. Liquid lines from the receivers to the evaporator should be sized to maintain velocities below 300 fpm, thus minimizing or preventing liquid hammer when solenoids or other electrically operated valves are used.

LINE SIZING

In sizing refrigerant lines, cost considerations favor keeping the line size as small as possible. However, suction and discharge line pressure drops cause loss of compressor capacity and increased power usage.

Excessive liquid line pressure drops can cause the liquid refrigerant to flash, resulting in faulty expansion valve operation. Refrigeration systems are designed so that friction pressure losses do not exceed a pressure differential equivalent to a corresponding change in the saturation boiling temperature.

The primary measure for determining pressure drop is a change in saturation temperature. Pressure drop in a refrigerant line causes a reduction in system efficiency. Correct sizing must be based on minimizing cost and maximizing efficiency.

Pressure drop calculations are determined as normal pressure loss associated with a change in saturation temperature of the refrigerant. Typically, the refrigeration system will be sized for pressure losses of 2°F differential or less for each segment of the discharge, suction, and liquid lines. An HFC refrigerant liquid line is sized for pressure losses of 1° differential or less.

IMPORTANT: The information above is intended for general information on refrigerant piping only. Reference specific AHU and condensing units manuals for specific piping details.

THERMOSTAT CONTROL

Uses a standard thermostat with a humidistat, a call for cooling turns on Y1, a call for heating turns on W1, a call for fan turns on fan. A humidity call (when there is no call for cooling) will turn on Y1 and also engage the modulating hot gas reheat valves.

GENERAL INSTRUCTIONS

An iAIRE's operation is a function of the options and control packages that the iAIRE unit is equipped with.

RECEIVING / INSPECTION

Check part # of iAIRE unit to ensure it is what was ordered.

Verify voltage/phases match.

At the time of delivery the iAIRE unit should be visually inspected for possible damage. If any damage is found it should be reported immediately to the last courier company, preferably in writing. iAIRE recommends leaving the iAIRE unit in its shipping packaging until the time of installation.

RIGGING

Utilize the Carrier factory information on rigging these units. If you need help accessing this information, please contact iAIRE customer service at:

sales@myiaire.com or 844-348-9168.

SAFETY CONSIDERATIONS

Installation and servicing of the iAIRE units can be hazardous due to system, pressure, electrical components and moving parts. Only trained and qualified service personnel should install, repair or service these units.

When working on iAIRE or other HVAC units observe precautions in the literature, tags and labels attached to the units, and any other safety precautions that may apply.

Follow all local, national and industry electrical codes when installing these units and accessories.

START-UP

SPACE / DISCHARGE AIR TEMP CONTROL PACKAGE START-UP

Physical Inspection (pre power-up)

Check part # of iAIRE unit to ensure it is what was ordered.
Verify voltage/phases match.

1. Verify condition of unit and note any installation or shipping damage to coils or cabinets.

2. Verify installation of condensate drain trap.

3. Verify power is available at disconnect and fuses are installed if required. Check incoming power to make sure it is within tolerance.

4. Verify that all airways are open. (Fire dampers and supply air registers.)

5. Check blower belt tension. (if available)

6. Confirm that the space sensor is installed. (Space Control units only, see wiring in figure "B" on installatoin wiring diagram pages. Space Sensors must be wired using shielded wire.

After power-up

1. Check incoming 3-phase power for a stinger leg if voltage is 208/230VAC. If so ensure that stinger leg (high voltage phase to ground) is the center leg.

2. Go to thermostat and set both the heat and cool CFM. The heat CFM is the VFD % in the heat mode that the AHU fan will run. The cool CFM is the VFD % the AHU fan will run in all other modes.

3. Remove panel from outside air section and verify outside air damper is fully open. Set adjustment thumb wheel on damper motor for full opening. Check crank arms and ball joints on damper mechanism allow damper to open fully.

Charging

1. Locate RCCD device in condenser section. Locate the RCCD Device and close the ball valve. This will stop flow to the RCCD Device

2. Disconnect 2-pin signal plug from Sporlan IB circuit board. This will close the modulating hot gas valve to allow correct charging.

3. Invert refrigerant jug to provide liquid charge into suction line and proceed to charge unit for 10 degrees of subcooling and 20 degrees superheat. Depending on ambient conditions, evaporator leaving air temperature should be between 48-58˚F.

4. When charge is complete return signal connector to Sporlan IB board and re-open Rawal ball valve.

5. Disconnect jumper from terminal strip input to allow the thermostat to take over machine.

6. Adjust sensor setpoint to a low setpoint to bring all cooling stages on and check if hot gas line warms up.

TEST PROCEDURE
Verify operation as described above by monitoring liquid line temperature and observing motor speed.

Heater check
1. Verify Kw of installed electric heaters.

2. Disconnect white space temperature sensor wire from terminal strip. (This will make the thermostat see a space temperature of -40 degrees and start heaters) There is a five minute delay at start of heat cycle. With heater running check amperage and verify discharge air temperature.

3. Return white space temperature sensor wire to terminal strip.

Checking and adjusting system refrigerant charge.

Before connecting gauges to the systems suction and discharge service ports, make the following adjustments.

1. Before running blower and compressors, close the manual ball valve on the discharge of the #1 compressor RCCD valve to eliminate Hot Gas Bypass during the charging process.
2. If Low Ambient is installed, shut off ball valve to low ambient and open bypass around low ambient to isolate L.A. valve.

3. Before running blower and compressors, put thermostat in TEST mode and manually set Hot Gas Valve % to 0.0% to direct all refrigerant to DX cooling.

a) Connect gauges. (Pre-load evacuated split systems with nominal weight of refrigerant)

b) Enable FAN and then Cool Stage 1 in TEST mode and allow several minutes for system to stabilize.

c) Note, high pressure saturation Temperature on gauge and the temperature of the Liquid Line leaving the condenser. (Condensing temperature should be 100-110 degrees minimum)

d) Calculate Sub cooling (Saturation Temp – Liquid line Temp = Sub cooling)

e) Charge systems for 12-15 degrees of sub cooling. Add refrigerant if sub cooling is low and remove if high. With all cooling stages enabled system should deliver 55 degree air, or less depending on ambient conditions.

f) Record sub cooling temperature _____ degrees

g) With thermostat still in TEST mode, increase the Hot gas valve position in increments until discharge air, (DAT) is raised to 70 - 72 degrees.

h) Record sub cooling temperature _____ Record evap saturation temperature _____

i) Open RCCD valve.

j) If Low Ambient is installed, open valve to low ambient and close valve to bypass Low Ambient.

k) Record sub cooling temperature _____ Record evap saturation temperature _____

l) Note: You can leave the TEST menu and enter the STATUS menu to check system temperatures at any time. TEST mode will remain active until it is manually disabled.

m) When charging and checks are complete, disable the TEST mode and open the RCCD valve.

n) Allow system to stabilize and check sub cooling again.

o) Add/Remove refrigerant as necessary to maintain

about 4 degree of sub cooling.

p) Remove gauges and replace service port covers.

q) If charging for the first time note all required conditions in startup sheets and record weight of all refrigerant added.

Record Keeping
1. Record all readings and conditions in startup sheets and add notes to call attention to any issues for the unit installing contractor to attend to.

2. Have the startup documents signed by supervising foreman for mechanical contractor.

MODULATING GAS SETUP:
1: SEE APPENDIX “E” for standard carrier heat

TROUBLESHOOTING

1. The unit does not come on.
   a. Check to make sure there is power to the unit.
   b. Check to make sure the disconnect is on.
   c. Check to make sure the jumper between pins on terminal strip 1 is removed.
      i. If other wires are attached to pins, make sure there is not a short or the unit will not turn on. This is the location for remote start/stop.
   d. Check to make sure the circuit breaker or the 24V power supply is not tripped.

2. Fan speed is not correct.
   a. Go to the thermostat and adjust the fan speed up or down as required.

3. The unit is tripping out on high heat and requires a manual reset.
   The air speed needs to be raised to prevent the heat from being too hot in the unit.

SEQUENCE OF OPERATIONS

THERMOSTAT CONTROL

FAN SPEED CONTROL

These units are equipped with variable speed supply fan control. There is a cooling and heating fan speed set point. In this application, both the cooling and heating fan speed set point should be the same. This should be set by the test and balance contractor to provide and correct CFM for the unit. Once the supply fan speed is initially set, it will not modulate.

NORMAL HOURS (not night set back)

Cooling Mode(humidistat on cooling) –When the temperature gets above the set point temperature by more than 2 degrees, the compressor will come on and start cooling the air. Once the temperature reaches the set-point, the compressor will turn off and the air will continue to circulate in the space without heating or cooling.

Heating Mode (humidistat on heating) – When the temperature gets below the set point temperature by more than 2 degrees, the heat pump will come and begin heating the air. Once the temperature reaches the set point temperature, the heat pump will turn off and the air will continue to circulate in the space without heating or cooling.

Humidity mode – When the unit is not running in cooling or heating and the humidity sensor on the humidistat registers a humidity higher than the set point humidity, the compressor will come on for cooling and the hot gas on/off valves will open to raise the discharge temperature of the air entering the building after cooling. This will help reduce the humidity without cooling the building off too much. Once the humidity is below the set point humidity, the unit compressor and hot gas on/off valves will shut off and the air will continue to circulate in the space without heating or cooling.

NIGHT SET BACK HOURS

Allows the occupant to set a schedule across the 7 day, 24 hour week to schedule set back temperatures at night to conserve energy.

UNOCCUPIED HOURS

Allows the occupant to set a schedule across the 7 day, 24 hour week to schedule the unit off to conserve energy.

NAVIGATING ON VICONICS THERMOSTAT:

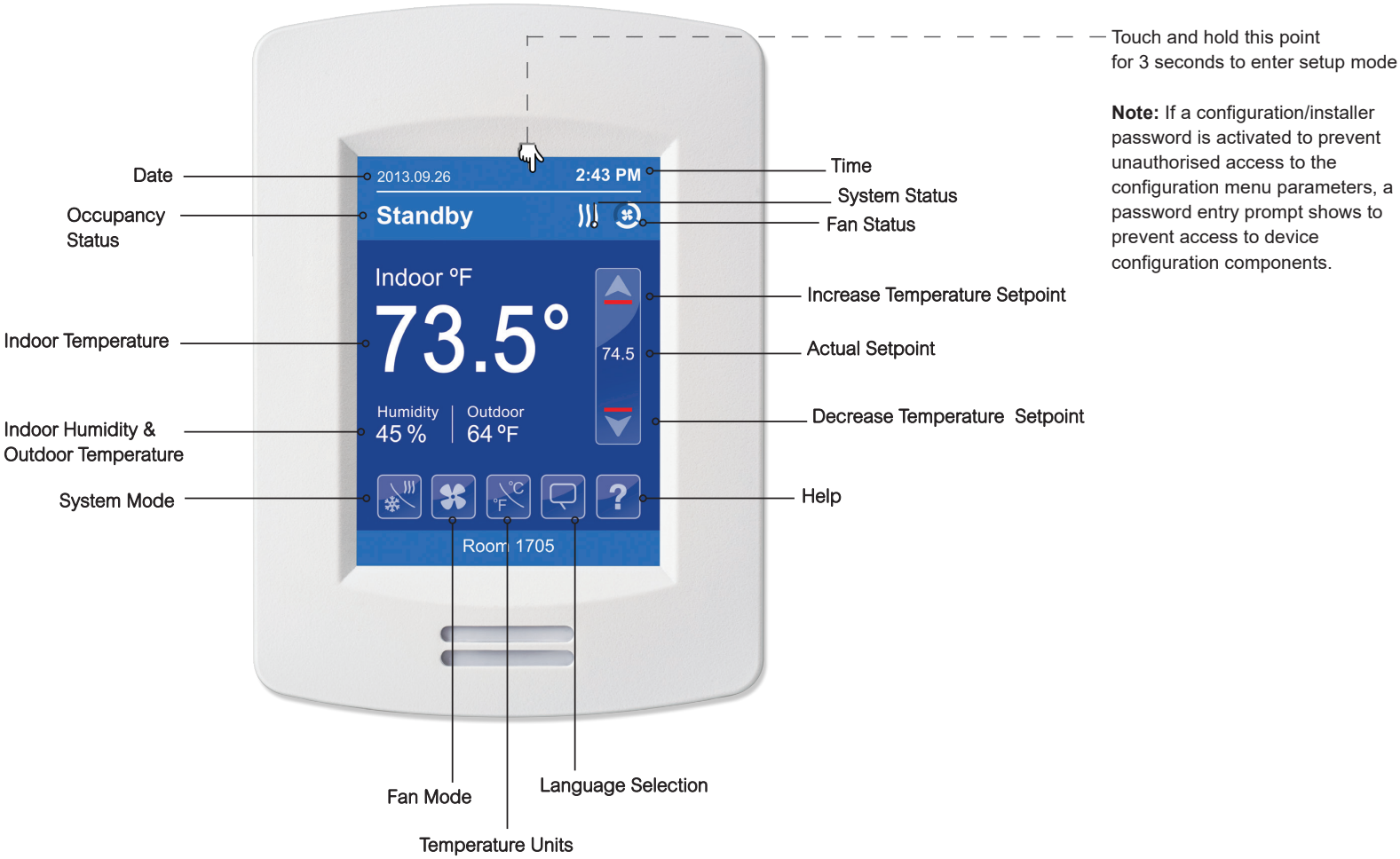

ADVANCED MENU NAVIGATION:

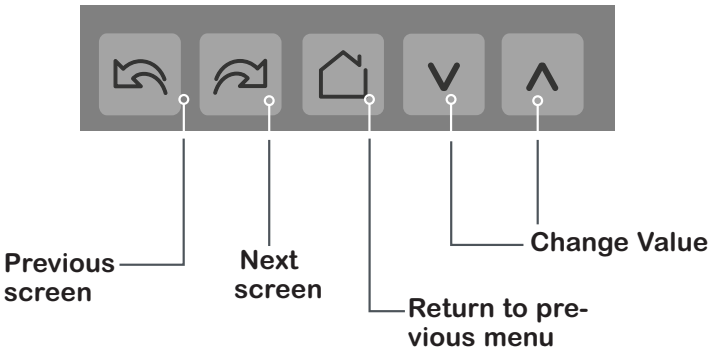

ADVANCED MENU

SETUP MENUS:

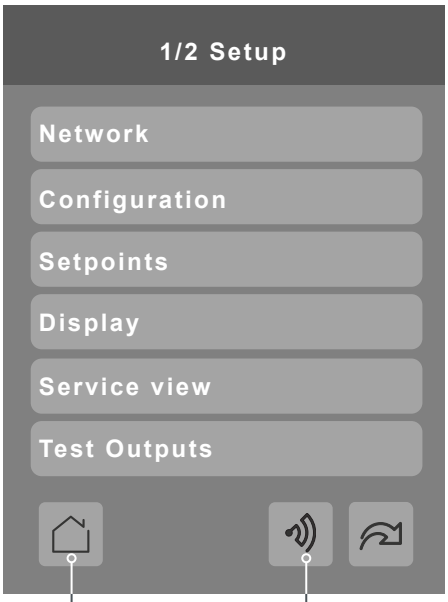

Return to previous menu

Discover Mode shows wireless ZigBee network. Icon not shown if ZigBee communication module not installed

DEFAULT SETTINGS TABLE:

SETUP OPTION	SUB-OPTION	PAGE	MENU OPTIONS	DEFAULT SETTING
Network	-	1/1	Onboard prot.	None
			Optional prot.	None
			Wired protocol	BAC MSTP
	BACnet Network	1/2	COM address	254
			Network units	Imperial
			Network lang.	English
			Baud rate	Auto
			BACnet status	Offline
			BACnet PRate	4
		2/2	BACnet Network Code	86253
Configuration	-	1/11	UI16 config	None
			UI17	None
			UI19	None
			Smart recovery	Off
			Setpoint func.	Attach SP
			Mode button	Off-Auto

DEFAULT SETTINGS TABLE: (CONT.)

SETUP OPTION	SUB-OPTION	PAGE	MENU OPTIONS	DEFAULT SETTING
Configuration (cont.)	-	2/11	Fan cont. heat	On
			Fan delay	On
			Standby mode	Absolute
			Standby diff.	4.0 F
			Power-up delay	10 Sec.
			Occupancy src	Motion
	-	3/11	Standby time	0.5 hrs
			Unocc. Time	0.0 hrs
			Temp. occ. Time	2.0 hrs
			Temp. sensor	Internal
			Deh. Hysteresis	5% RH
			Deh. Lockout	Disabled
	-	4/11	Cooling CPH	4
			Heating CPH	4
			Frost protec.	Off
			BO1 aux. config	NO
			Anti short cycle	2 min
			Min sup. Heat	64.0 F
	-	5/11	Prop. Band	3
			Heat stages	2
			Cool stages	2
			Econo. config	Off
			Changeover SP	55.0 F
			Mech. Cooling	Off
	-	6/11	Heat lockout	120.0 F
			Cool lockout	-40.0 F
			Discharge HL	120.0 F
			Discharge LL	45.0 F
			SH lockout	32.0 F
			FA range	0 CFM
	-	7/11	Econo min pos	0%
			Econo max pos	100%
			Min fresh air	0 CFM
			Max fresh air	0 CFM
			Min CO2	800 PPM
			Max CO2	1200 PPM
	-	8/11	Application	Rooftop
			High BP	90.0 F
			Low BP	-12.0 F
			Comf. Or econ.	Comfort
			Rev. valve	O
			Comp. interlock	Off

DEFAULT SETTINGS TABLE: (CONT.)

SETUP OPTION	SUB-OPTION	PAGE	MENU OPTIONS	DEFAULT SETTING
Configuration (cont.)	-	9/11	Main password	0
			User password	0
			Schedule menu	Enabled
	-	10/11	Calib. temp.	0.0 F
			Calib. OS temp.	0.0 F
			Calib. humid.	0.0% RH
			RH sensor	Internal
			CO2 source	Local
	Reinitialization	11/11	Erase all?	No
			Are you sure?	No
Setpoints	-	1/2	Unocc. cool	100.0 F
			Standby cool	100.0 F
			Occ. cool	93.0 F
			Occ. heat	90.0 F
			Standby heat	40.0 F
			Unocc. heat	40.0 F
	-	2/2	Default heat	72.0 F
			Min. deadband	30.0 F
			Max. heating	90.0 F
			Min. cooling	54.0 F
			Supply air SP	55.0 F
			Dehum. SP	50% RH
Display	-	1/3	User HMI	0
			Color	Orange
			Main display	Temp.
			Standby screen	No
			Lock screen	No
			Contrast	-2
	-	2/3	Language	English
			Units	F
			Low backlight	60%
			Night backlight	5%
			RH display	Enabled
			CO2 Display	Disabled
	-	3/3	Fan status	Enabled
			System status	Enabled
			Help button	Disabled

DEFAULT SETTINGS TABLE: (CONT.)

SETUP OPTION	SUB-OPTION	PAGE	MENU OPTIONS	DEFAULT SETTING
Service View	-	1/10	Room temp.	89.5 F
			UI20 temp.	-40.0 F
			Outdoor temp.	-40.0 F
			Supply temp	48.5 F
	-	2/10	Effective occ.	Occupied
			PI cool demand	100%
			PI heat demand	0%
			Cool dem. limit	0%
			Heat dem. limit	0%
			Econo. demand	0%
	-	3/10	UI16 binary	Not activ.
			UI17 binary	Activated
			UI19 analog	0.0 Vdc
			Airflow level	0 CFM
	-	4/10	Window alarm	Off
			Service alarm	Off
			Filter alarm	Off
			CO2 alarm	Off
			Low air alarm	Off
	-	5/10	Frost alarm	Off
			Recovery	Off
			Local motion	No motion
			Deh. status	Off
			Room humidity	77% RH
	-	6/10	UO9 config	Analog
			UO10 config	Analog
			UO11 config	Analog
			UO12 config	Analog
	-	7/10	UI19 type	Voltage
			UI20 type	Voltage
			UI22 type	Therm.
			UI23 type	Therm.
			UI24 type	Voltage
	-	8/10	CO2 eff. Source	None
			CO2 err. Code	0x0000
			CO2 level	0 PPM
			CO2 FW rev.	-
			CO2 S/N	-
	-	9/10	Eff. sys. mode	Cool
			Eff. setpoint	80.0 F

DEFAULT SETTINGS TABLE: (CONT.)

SETUP OPTION	SUB-OPTION	PAGE	MENU OPTIONS	DEFAULT SETTING
Test Outputs	-	1/2	BO1 aux. out	Off
			G fan status	On
			Y1 status	On
			Y2 status	On
			W1 status	Off
			W2/OB status	Off
	-	2/2	OU10 analog	0.0 Vdc
			UO11 analog	0.0 Vdc
			UO12 binary	Off
Language Selection	-	1/4	French	Disabled
			Spanish	Disabled
			Chinese	Disabled
			Russian	Disabled
			Arabic	Disabled
			Czech	Disabled
	-	2/4	Danish	Disabled
			Dutch	Disabled
			Finnish	Disabled
			German	Disabled
			Hebrew	Disabled
			Hungarian	Disabled
	-	3/4	Indonesian	Disabled
			Italian	Disabled
			Japanese	Disabled
			Norwegian	Disabled
			Polish	Disabled
			Portugese	Disabled
	-	4/4	Slovak	Disabled
			Swedish	Disabled
			Turkish	Disabled
Clock - Schedule	**Clock**	1/2	Time format	AM-PM
			Time	10:43 AM
			Year	2000
			Month	Jan.
			Day	6
			Weekday	Saturday
		2/2	Time source	None
	Schedule	1/1	Occupied 1	--:--
			Unoccupied 1	--:--
			Occupied 2	--:--
			Unoccupied 2	--:--
			Occuopied 3	--:--
			Unoccupied 3	--:--
	Options	1/1	Occupancy cmd	Occupied
			Schedule type	7 days

DEFAULT SETTINGS TABLE: (CONT.)

SETUP OPTION	SUB-OPTION	PAGE	MENU OPTIONS	DEFAULT SETTING
ADR	-	1/1	Permission	Off
			Shed status	Off
			Shed demand	Off
			Shed offset	4.0 F
			Shed override	Off
Lua (Custom Menu containing VFD speed setpoint and HGRH min and max)	-	2/4	Program cmd	Run
			Program status	Running
			Program error	No error
	-	3/4	VFDSpeed %	75
			HGRH Min %	2
			HGRH Max %	75
			SATOffsetDeg	0
			CoolDemand	50
			SatPBand	3
	-	4/4	OatHumid%	0
			Param. H AV226	0
			Param. I AV227	0
			Param. J AV228	0
			Param. K AV229	0
			Param. L AV2230	0

SCH-0014-E
REVISION: V05.04

ABB VFD WIRING

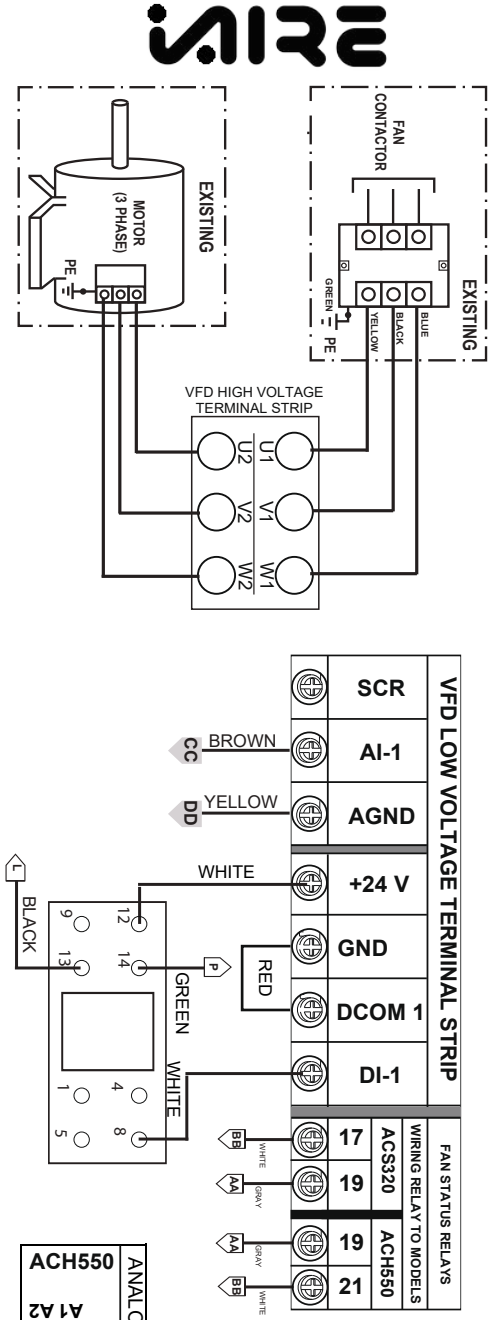

SCH-0014-E
REVISION: V05.04

LENZE VFD WIRING

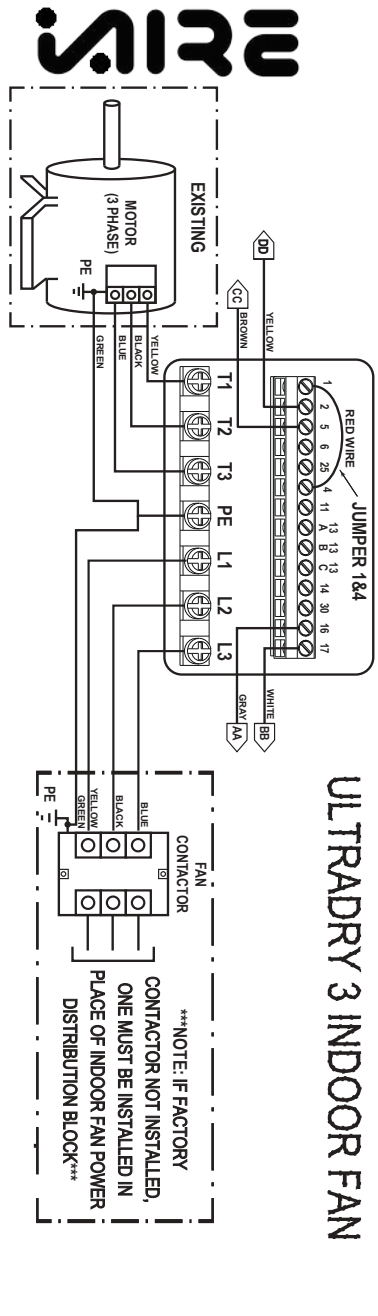

SCH-0014-E
REVISION: V05.04

DIRECT DRIVE WIRING

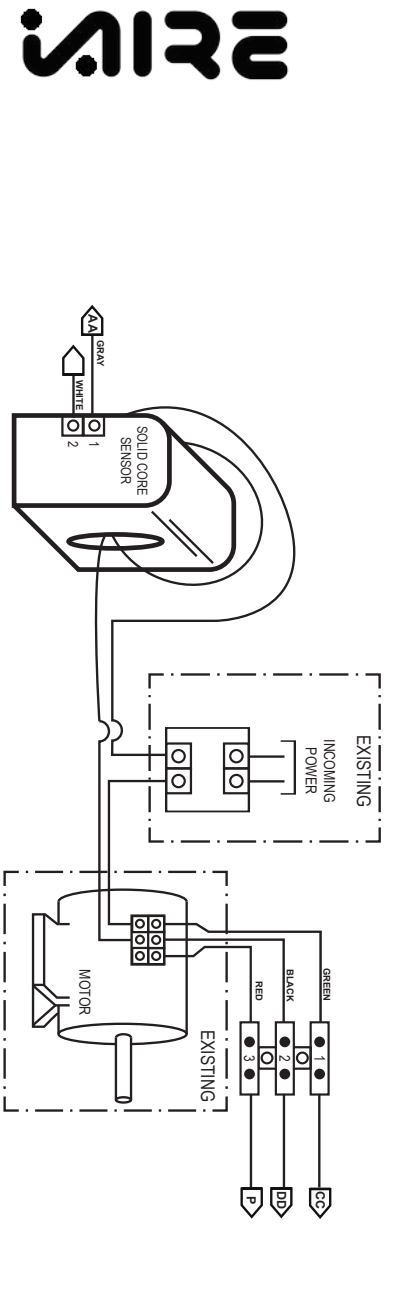

UltraDRY Thermostat Control Wiring Split Systems

SCH-0024

Revision: V05.05

Thermostat Wiring

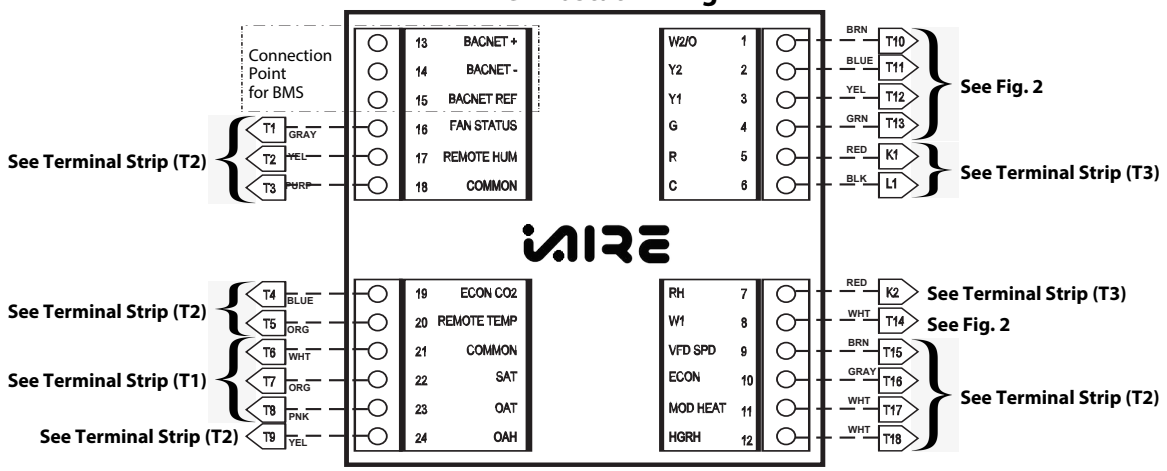

NOTE 1: All field wiring must be shielded cable or twisted pair with drain wire.

NOTE 2: Actual number of heating and cooling stages may vary, see factory board for required connections.

— — — — FIELD SUPPLIED WIRING

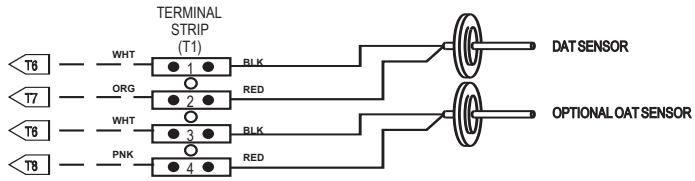

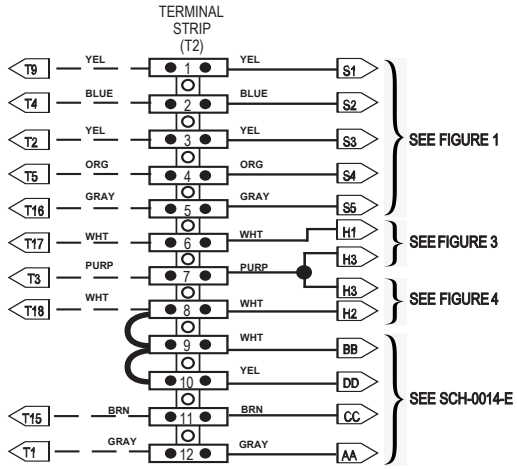

OPTIONAL SENSORS

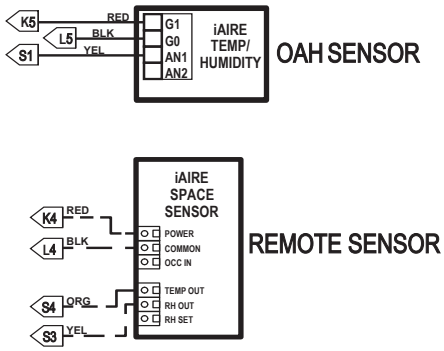

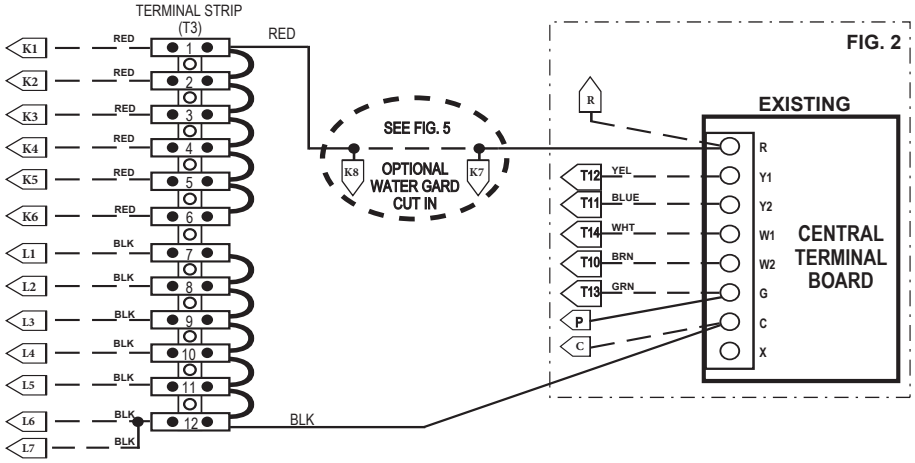

UltraDRY Thermostat Control Wiring Split Systems

SCH-0024

Revision: V05.05

NOTE 1: All field wiring must be shielded cable or twisted pair with drain wire.

NOTE 2: Actual number of heating and cooling stages may vary, see factory board for required connections.

— — — — FIELD SUPPLIED WIRING

OPTIONAL MODULATING HEAT

FIGURE 3.A

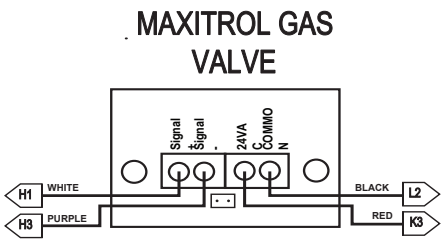

FIGURE 3.B

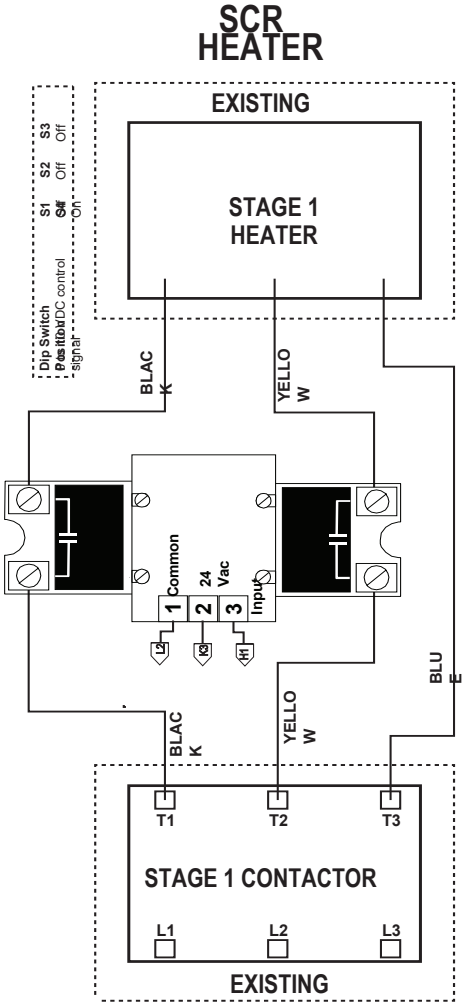

FIGURE 4 SPLIT SYSTEMS

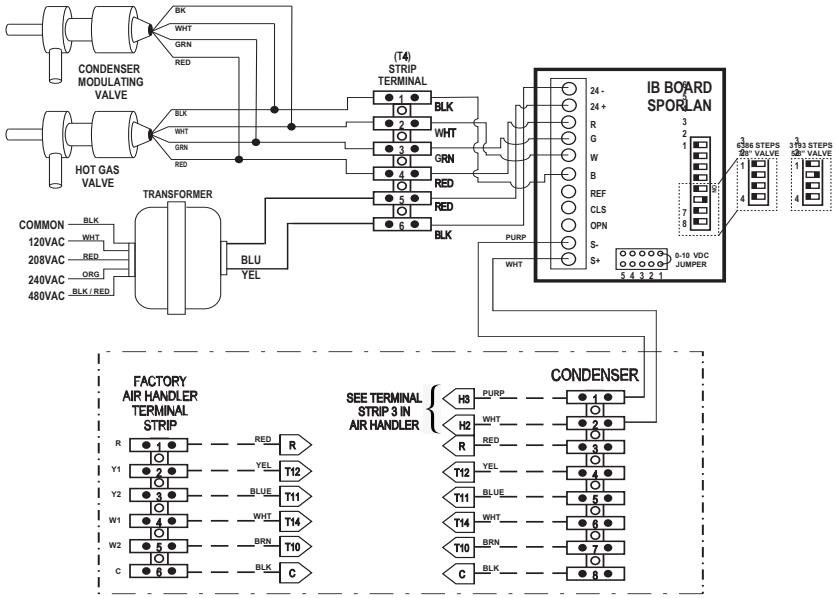

FIGURE 5 OPTIONAL WATER GUARD

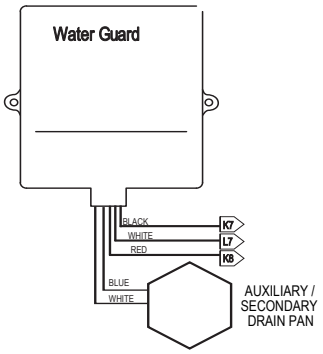

OPTIONAL DIRTY FILTER

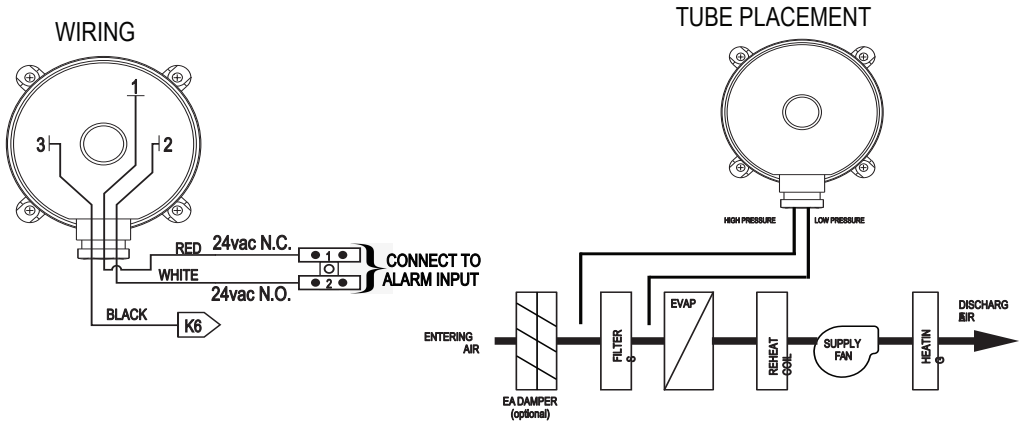

UltraDRY Thermostat Control Wiring RTU Systems

SCH-0025

Revision: V05.03

Thermostat Wiring

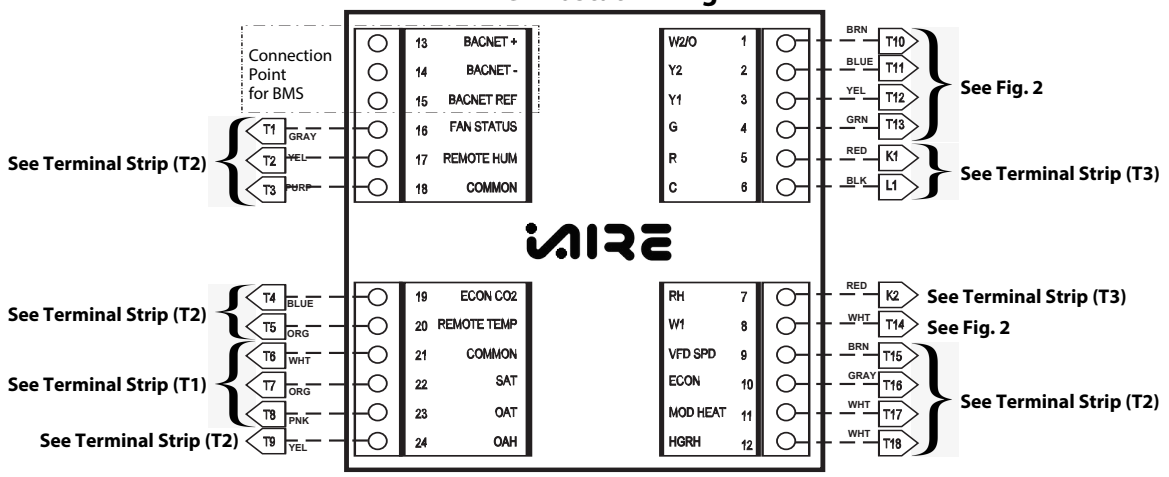

NOTE 1: All field wiring must be shielded cable or twisted pair with drain wire.

NOTE 2: Actual number of heating and cooling stages may vary, see factory board for required connections.

— — — — FIELD SUPPLIED WIRING

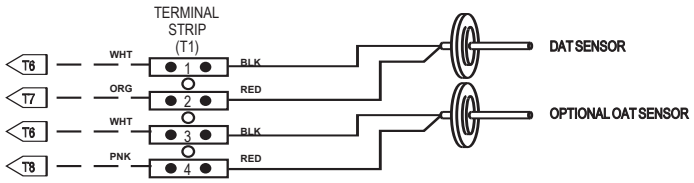

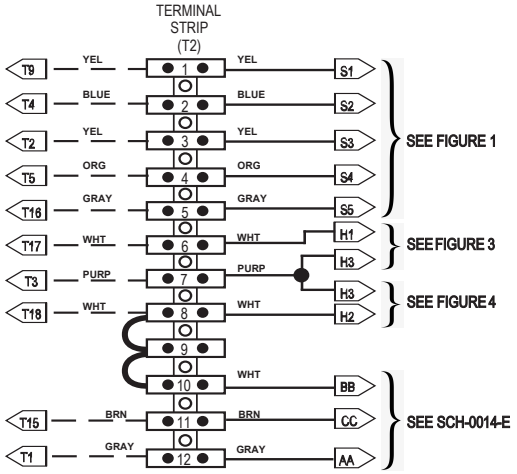

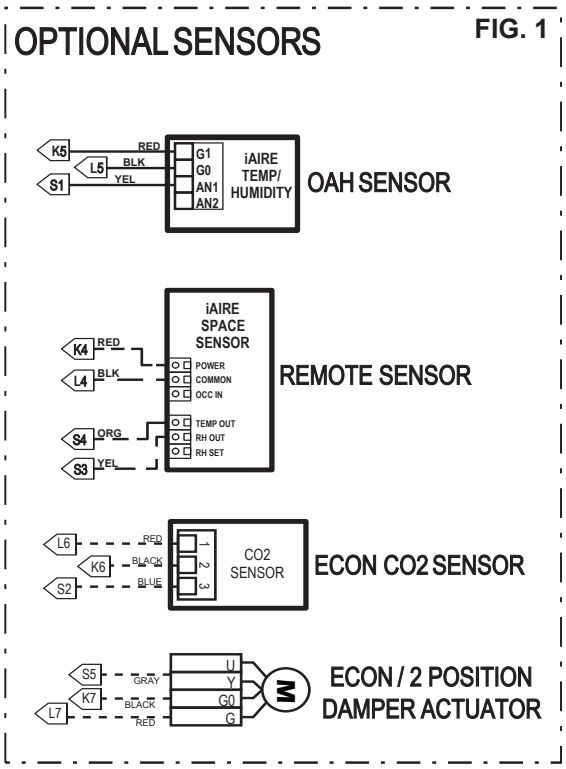

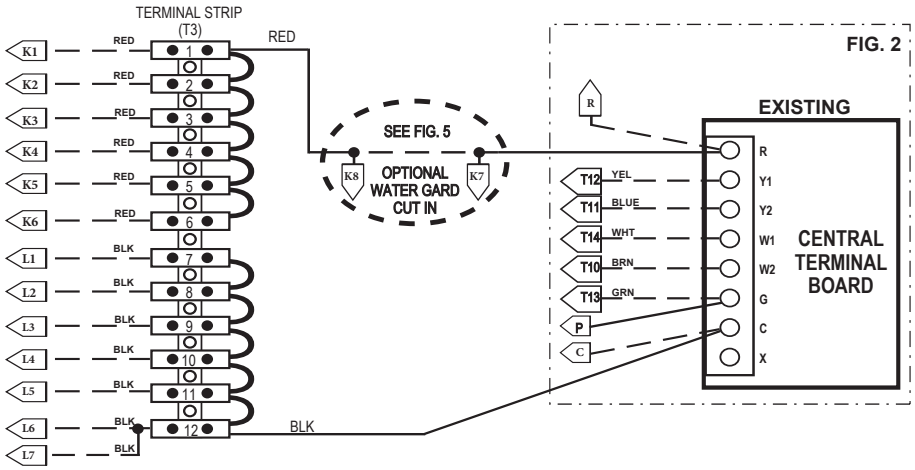

UltraDRY Thermostat Control Wiring RTU Systems

SCH-0025

Revision: V05.03

NOTE 1: All field wiring must be shielded cable or twisted pair with drain wire.

NOTE 2: Actual number of heating and cooling stages may vary, see factory board for required connections.

— — — — FIELD SUPPLIED WIRING

OPTIONAL MODULATING HEAT

FIGURE 3.A

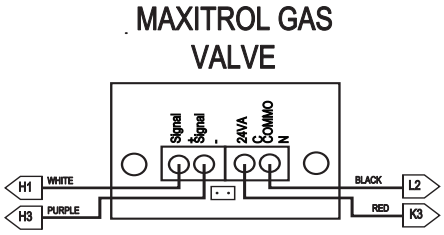

FIGURE 3.B

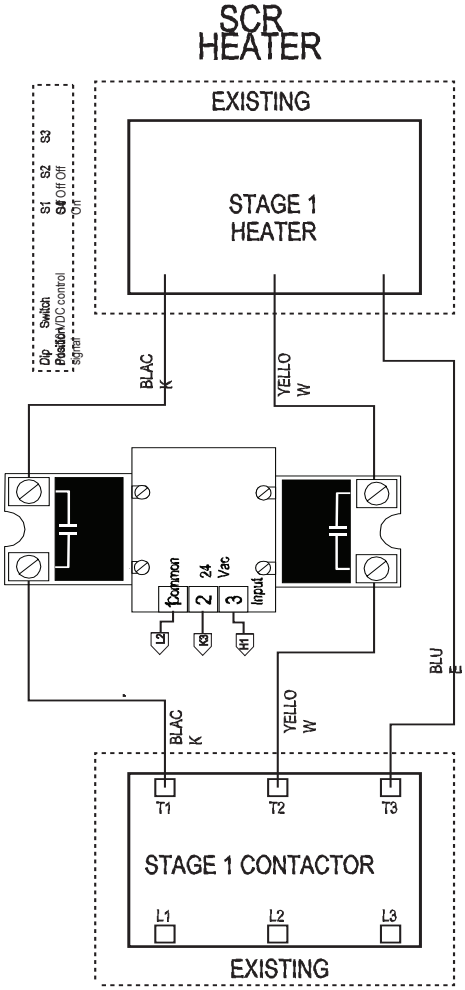

FIGURE 4 PACKAGE RTU

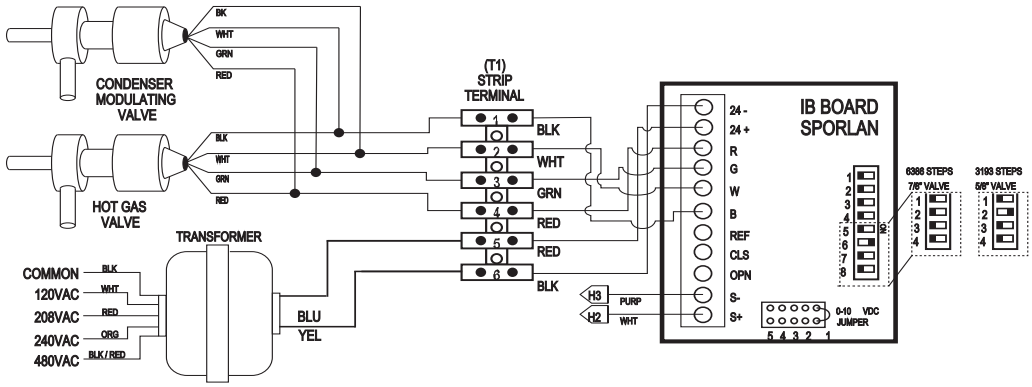

FIGURE 5 OPTIONAL WATER GARD

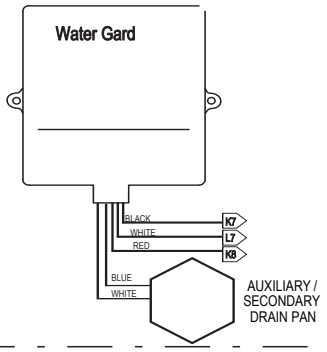

OPTIONAL DIRTY FILTER

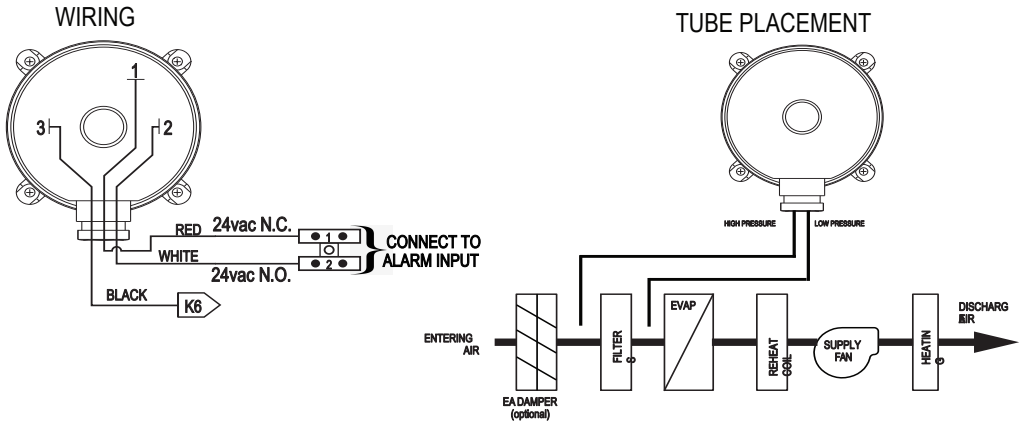

THERMOSTAT CONTROL - BACNET POINTS LIST

OBJECT ID	Description	Point Type	BacNET Name	BacNET Object	Object Type	Read Access
1	Occupancy Command	MULTI	Occupancy Command	MULTI_STATE_VALUE:10	MSV	READ / WRITE
2	Control System Mode	MULTI	System Mode	MULTI_STATE_VALUE:16	MSV	READ / WRITE
3	Fan Control Mode	MULTI	Fan Mode	MULTI_STATE_VALUE:17	MSV	READ / WRITE
4	Thermostat Time Source	MULTI	Time Source	MULTI_STATE_VALUE:325	MSV	READ / WRITE
5	Occupancy Status	MULTI	Effective Occupancy	MULTI_STATE_VALUE:33	MSV	READ ONLY
6	Supply/Discharge Air Temp	ANALOG	UI22 Supply Temperature	ANALOG_VALUE:102	AI	READ ONLY
7	Thermostat Room Temperature	ANALOG	Room Temperature	ANALOG_VALUE:100	AI	READ / WRITE
8	VFD Speed Setpoint	ANALOG	Lua Parameter A (AV25)	ANALOG_VALUE:25	AO	READ / WRITE
9	User Password (change SP & Mode)	ANALOG	User Password	ANALOG_VALUE:57	AI	READ / WRITE
10	Main Password (change configuration)	ANALOG	Main Password	ANALOG_VALUE:56	AI	READ / WRITE
11	Dehumidifcation Setpoint	ANALOG	Dehumidifcation Setpoint	ANALOG_VALUE:71	AI	READ / WRITE
12	Occupied Cool Setpoint	ANALOG	Occupied Cool Setpoint	ANALOG_VALUE:40	AI	READ / WRITE
13	Occupied Heat Setpoint	ANALOG	Occupied Heat Setpoint	ANALOG_VALUE:39	AI	READ / WRITE
14	Unoccupied Cool Setpoint	ANALOG	Unoccupied Cool Setpoint	ANALOG_VALUE:44	AI	READ / WRITE
15	Unoccupied Heat Setpoint	ANALOG	Unoccupied Heat Setpoint	ANALOG_VALUE:43	AI	READ / WRITE
16	Hot Gas Reheat Output	ANALOG	UO12 Analog Output	ANALOG_OUTPUT:124	AO	READ ONLY
17	Dehumidificaiton Status	ANALOG	Dehumidificaiton Status	BINARY_VALUE:38	BO	READ ONLY
18	W2 or OB Output Status	ANALOG	W2/OB Status	BINARY_OUTPUT:29	BO	READ ONLY
19	W1 Output Status	ANALOG	W1 Status	BINARY_OUTPUT:28	BO	READ ONLY
20	Y2 Output Status	ANALOG	Y2 Status	BINARY_OUTPUT:27	BO	READ ONLY
21	Y1 Output Status	ANALOG	Y1 Status	BINARY_OUTPUT:26	BO	READ ONLY
22	G Output Status	ANALOG	G Fan Status	BINARY_OUTPUT:25	BO	READ ONLY
23	Fan Input Status	ANALOG	UI16 Binary Input	BINARY_INPUT:29	BI	READ ONLY
24	Thermostat Room Humidity	ANALOG	Room Humidity	ANALOG_VALUE:103	AO	READ ONLY

RTU PIPING DIAGRAM

SCH-0001-P

REVISION: V5.0.0.2

SAFETIES
AT LOW SUCTION PRESSURES (LOW LOAD) THE RAWAL DEVICE WILL BYPASS HOT GAS TO THE COMPRESSOR. RAWAL DEVICE WILL ALSO INJECT SOME LIQUID REFRIGERANT INTO SUCTION LINE TO AVOID OVERHEATING THE COMPRESSOR DURING BYPASS. THIS WILL ALSO PROLONG USE OF FIRST STAGE AND IMPROVE DEHUMIDIFICATION.

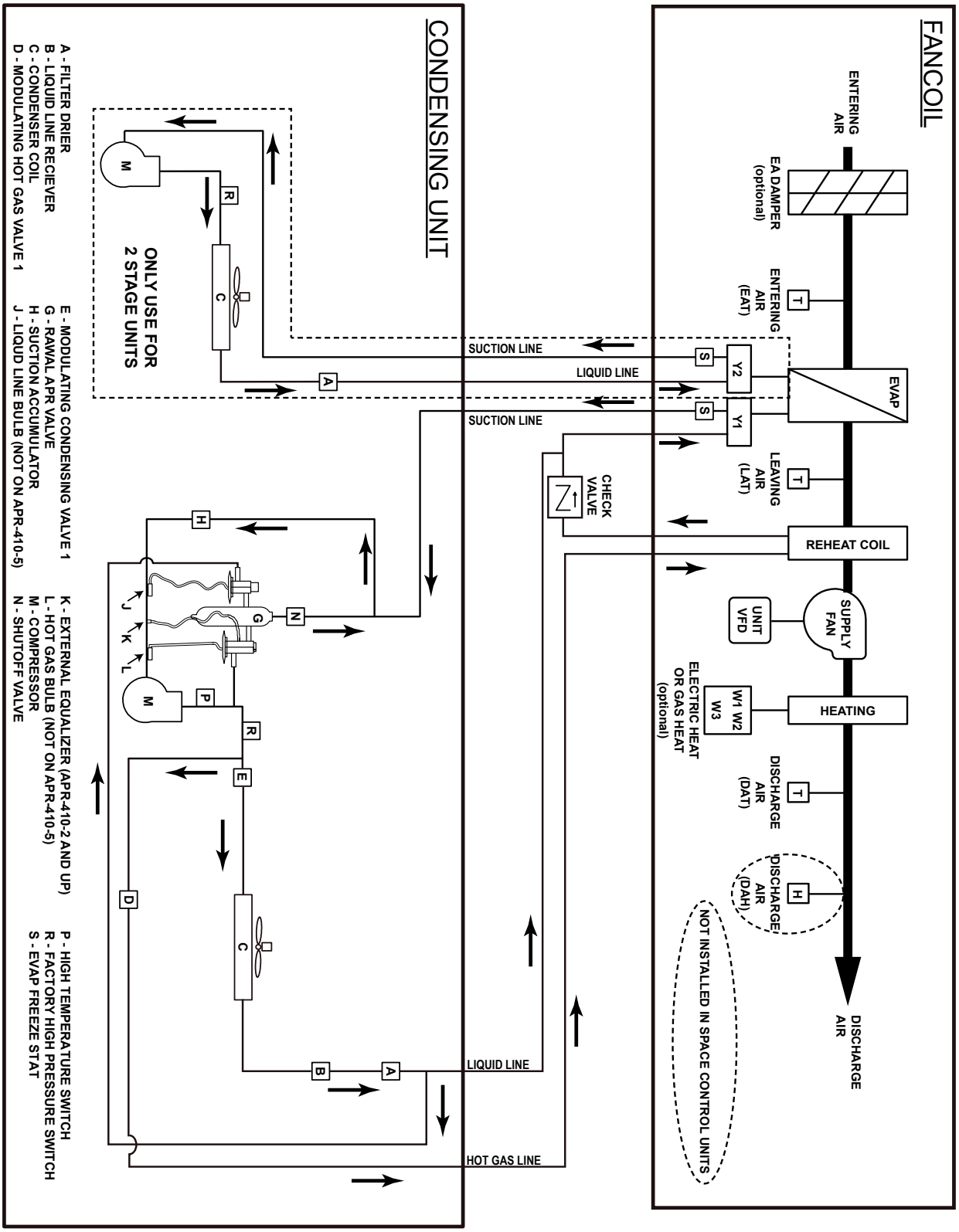

SAFETIES

AT LOW SUCTION PRESSURES (LOW LOAD) THE RAWAL DEVICE WILL BYPASS HOT GAS TO THE COMPRESSOR. RAWAL DEVICE WILL ALSO INJECT SOME LIQUID REFRIGERANT INTO SUCTION LINE TO AVOID OVERHEATING THE COMPRESSOR DURING BYPASS. THIS WILL ALSO PROLONG USE OF FIRST STAGE AND IMPROVE DEHUMIDIFICATION.

RTU HP PIPING DIAGRAM

SCH-0002-P

REVISION: V5.0.0.1

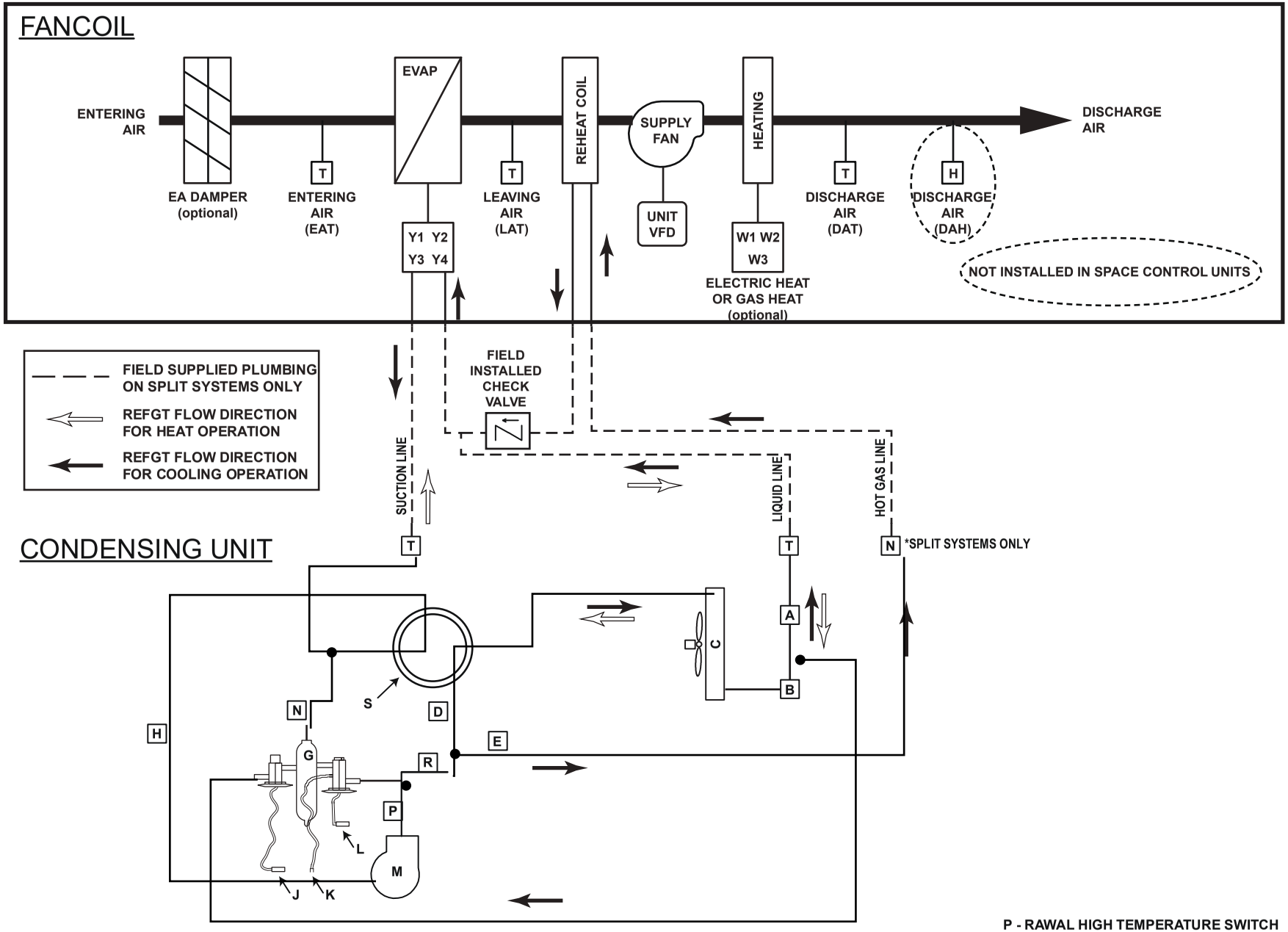

A - FILTER DRIER
B - LIQUID LINE RECIEVER
C - CONDENSER COIL
D - MODULATING CONDENSING VALVE 1
E - MODULATING HOT GAS VALVE 1
G - RAWAL APR VALVE
H - SUCTION ACCUMULATOR
J - LIQUD LINE BULB (NOT ON APR-410-5)
K - EXTERNAL EQUALIZER (APR-410-2 AND UP)
L - HOT GAS BULB (NOT ON APR-410-5)
M - COMPRESSOR
N - SHUTOFF VALVE
P - RAWAL HIGH TEMPERATURE SWITCH
Q - LOW-AMBIENT CONTROL OPTION
R - FACTORY HIGH PRESSURE SWITCH
S - REVERSING VALVE
T - FACTORY MAINTENANCE VALVE

IONIZATION OPTION WIRING

SCH-0001-O

REVISION: V3-2.0.0

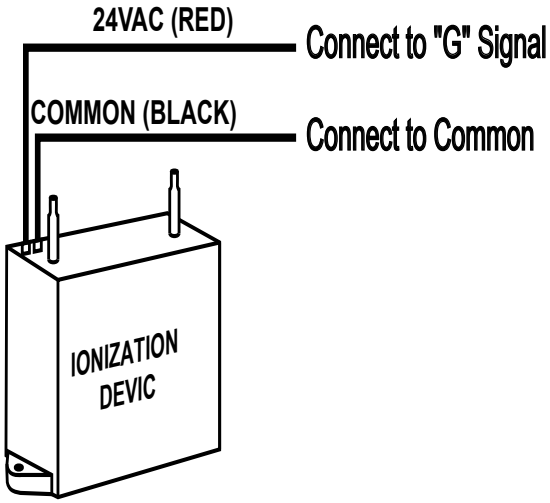

POWERED SERVICE OUTLET OPTION WIRING SCH-0010-O

REVISION: V5.0.0.1

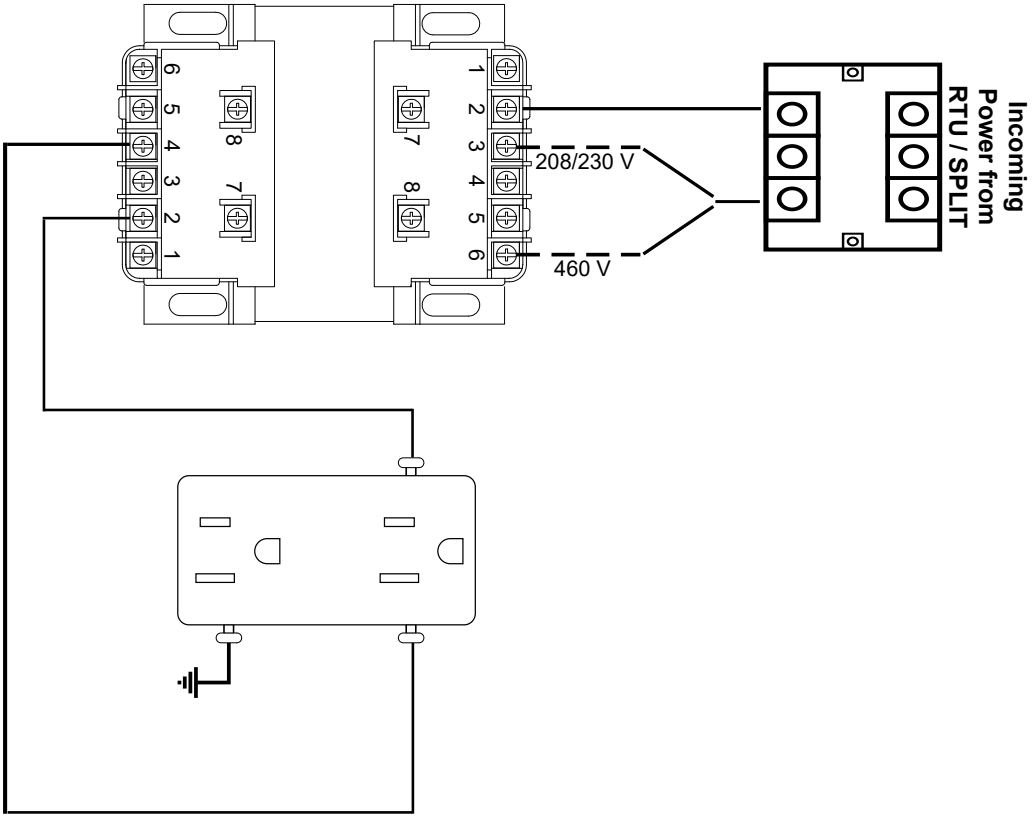

SMOKE SENSOR OPTION WIRING

SCH-0012-O

REVISION: V3-2.0.3

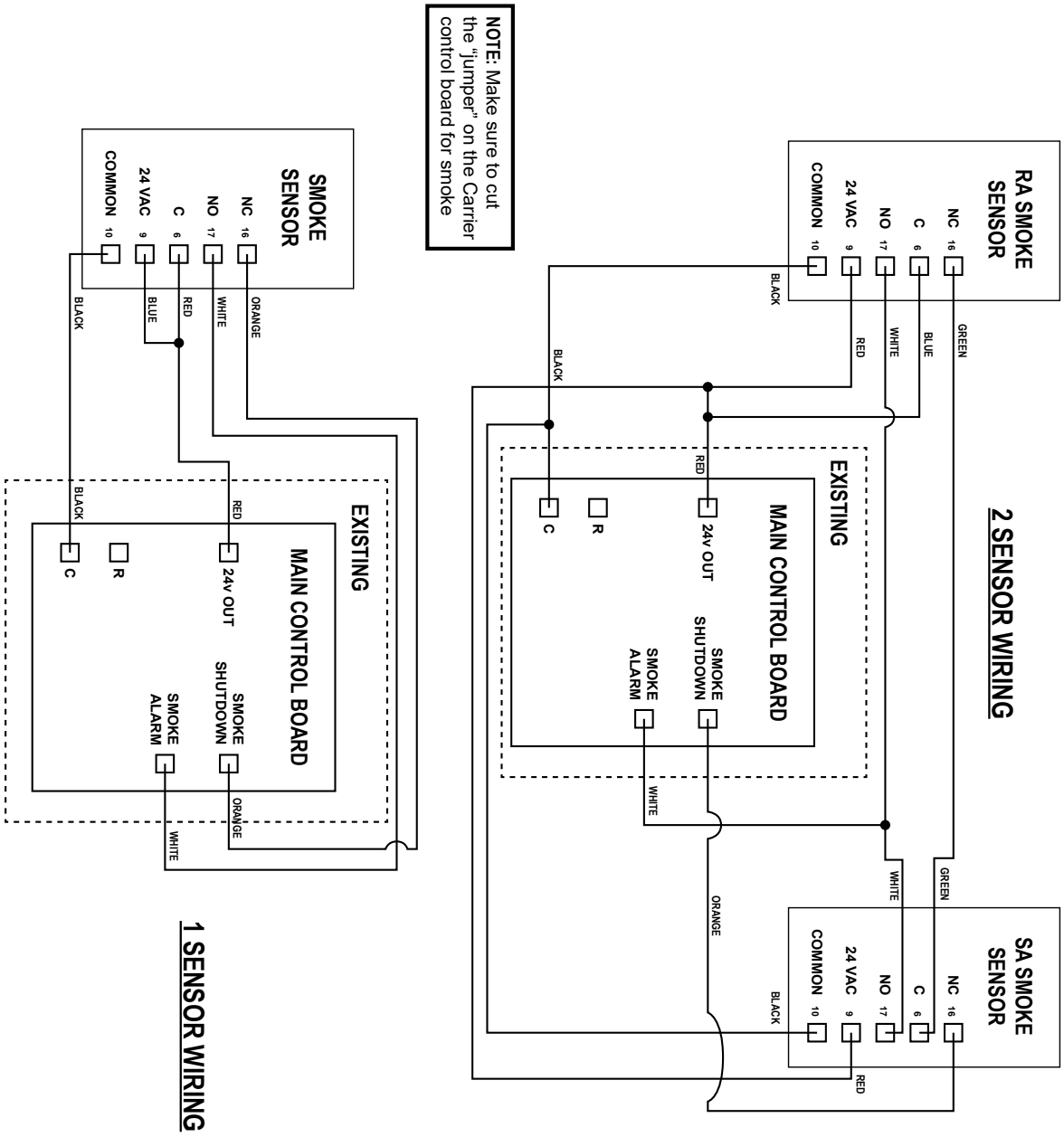

ECONOMIZER CONTROL SCHEMATIC (COMM Split Only)

2/05/2014 v 1.0
SCH-0014-O

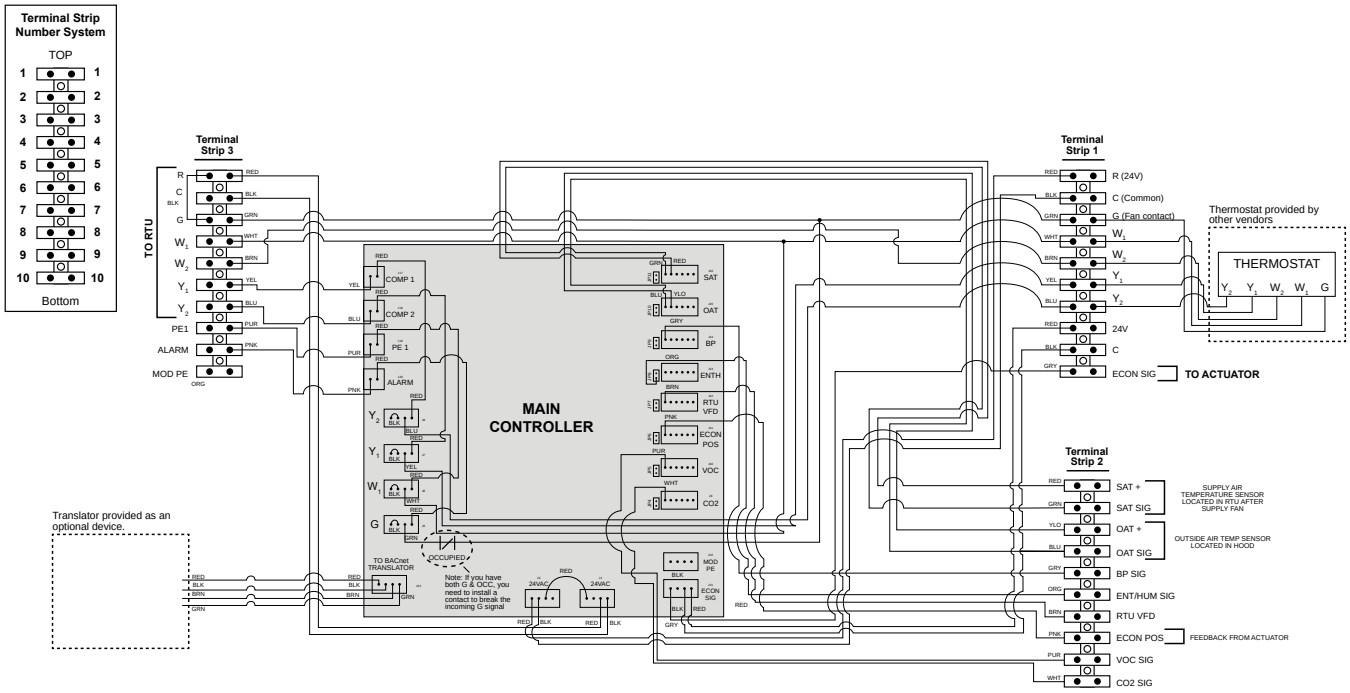

THERMOSTAT CONTROL - ECONOMIZER BACNET POINTS LIST

Object ID	iAIRE Point Name	Point Type	BacNET Object	Object Type	Default Set Points	Read Access
1	OUTSIDE AIR TEMPERATURE	ANALOG		AV	N/A	READ ONLY
2	SUPPLY AIR TEMPERATURE	ANALOG		AV	N/A	READ ONLY
3	ECON HIGH LIMIT SETPOINT	ANALOG		AV	65 DEGF	READ / WRITE
4	ECON LOW LIMIT SETPOINT	ANALOG		AV	0 DEGF	READ / WRITE
5	ECON FREE COOL SETPOINT	ANALOG		AV	55 DEGF	READ / WRITE
6	ECON MIN POSITION SETPOINT	ANALOG		AV	0.2	READ / WRITE
7	ECON MAX POSITION SETPOINT	ANALOG		AV	1	READ / WRITE
8	ECONOMIZER DAMPER POSITION	ANALOG		AV	N/A	READ ONLY
9	ECONOMIZER DAMPER COMMANDED	ANALOG		AV	N/A	READ ONLY
10	VOC STATUS	ANALOG		AV	N/A	READ ONLY
11	VOC MAX SETPOINT	ANALOG		AV	900 PPM	READ / WRITE
12	VOC MIN SETPOINT	ANALOG		AV	400 PPM	READ / WRITE
13	VOC MIN POSITION	ANALOG		AV	0	READ / WRITE
14	VOC MAX POSITION	ANALOG		AV	0.15	READ / WRITE
15	CO2 STATUS	ANALOG		AV	N/A	READ ONLY
16	CO2 MAX SETPOINT	ANALOG		AV	900 PPM	READ / WRITE
17	CO2 MIN SETPOINT	ANALOG		AV	500 PPM	READ / WRITE
18	IAQ Min Position	ANALOG		AV	0	READ / WRITE
19	HUMIDITY STATUS	ANALOG		AV	N/A	READ ONLY
20	OUTSIDE ENTHALPY SETPOINT	ANALOG		AV	80 KJ/KG	READ / WRITE
21	ENTHALPY STATUS	ANALOG		AV	N/A	READ ONLY
22	BUILDING PRESSURE	ANALOG		AV	N/A	READ / WRITE
23	BUILDING PRESSURE SETPOINT	ANALOG		AV	0.05 IN-WC	READ / WRITE
24	PWR EXHAUST DMP POSITION	ANALOG		AV	30	READ / WRITE
25	PWR EXHAUST STATUS	DIGITAL		BV	N/A	READ ONLY
26	PWR EXHAUST %	ANALOG		AV	N/A	READ ONLY
27	HEATING STG 1 INPUT	DIGITAL		BV	N/A	READ ONLY
28	HEATING STG 2 INPUT	DIGITAL		BV	N/A	READ ONLY
29	HEATING STG 1 OUTPUT	DIGITAL		BV	N/A	READ ONLY
30	HEATING STG 2 OUTPUT	DIGITAL		BV	N/A	READ ONLY
31	COOLING STG 1 INPUT	DIGITAL		BV	N/A	READ ONLY
32	COOLING STG 2 INPUT	DIGITAL		BV	N/A	READ ONLY
33	COOLING STG 1 OUTPUT	DIGITAL		BV	N/A	READ ONLY
34	COOLING STG 2 OUTPUT	DIGITAL		BV	N/A	READ ONLY
35	FREE COOLING STATUS	DIGITAL		BV	N/A	READ ONLY

STANDALONE IONIZATION WIRING

SCH-0015-O

REVISION: V3-2.0.0

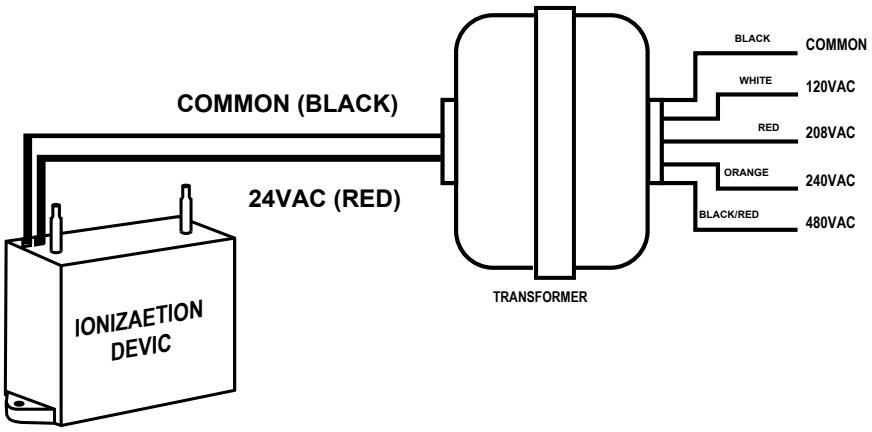

HIGH STATIC FAN INSTALL

SCH-0024-O

REVISION: V5.0.0.2

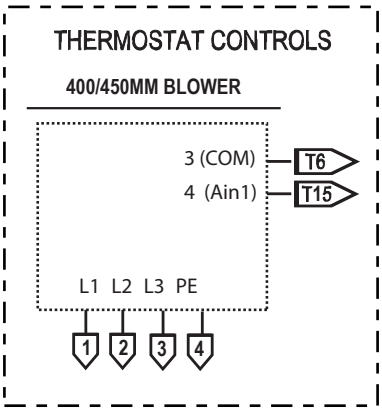

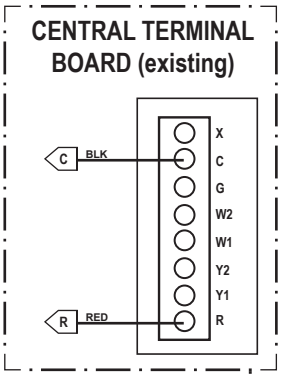

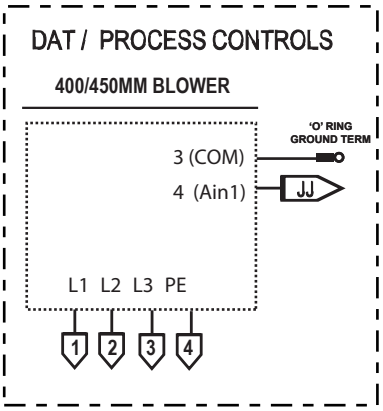

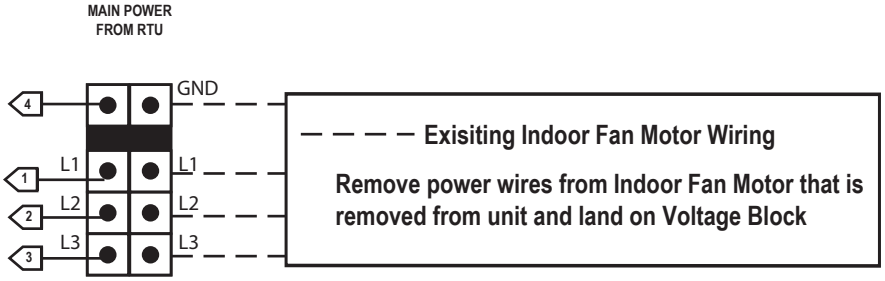

AIRFLOW HOOD WIRING DIAGRAM

12/19/2013 v 1.2

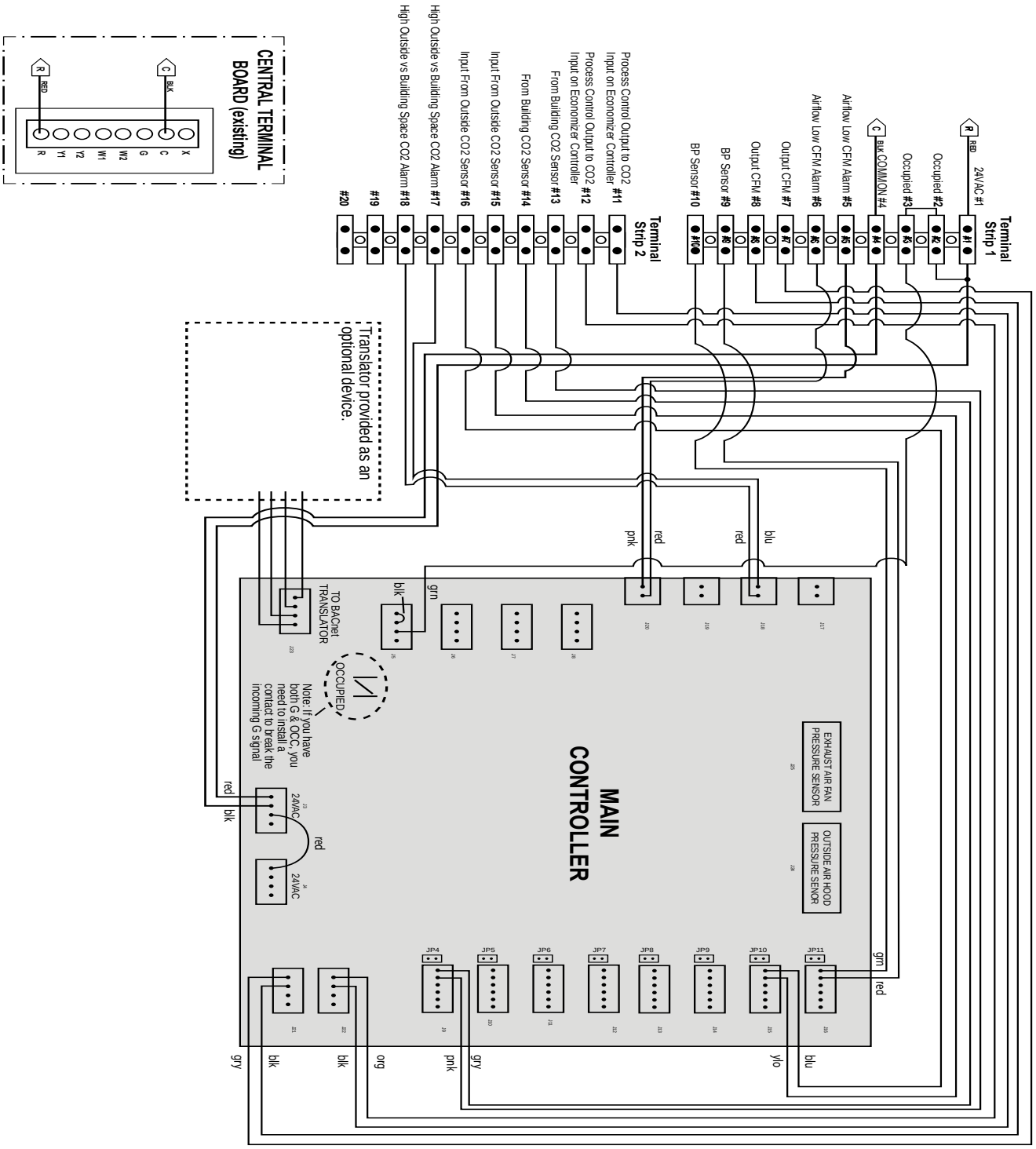

LOW AMBIENT SINGLE PHASE OUTDOOR FAN

SCH-0027-O

REVISION: V5.0.0.3

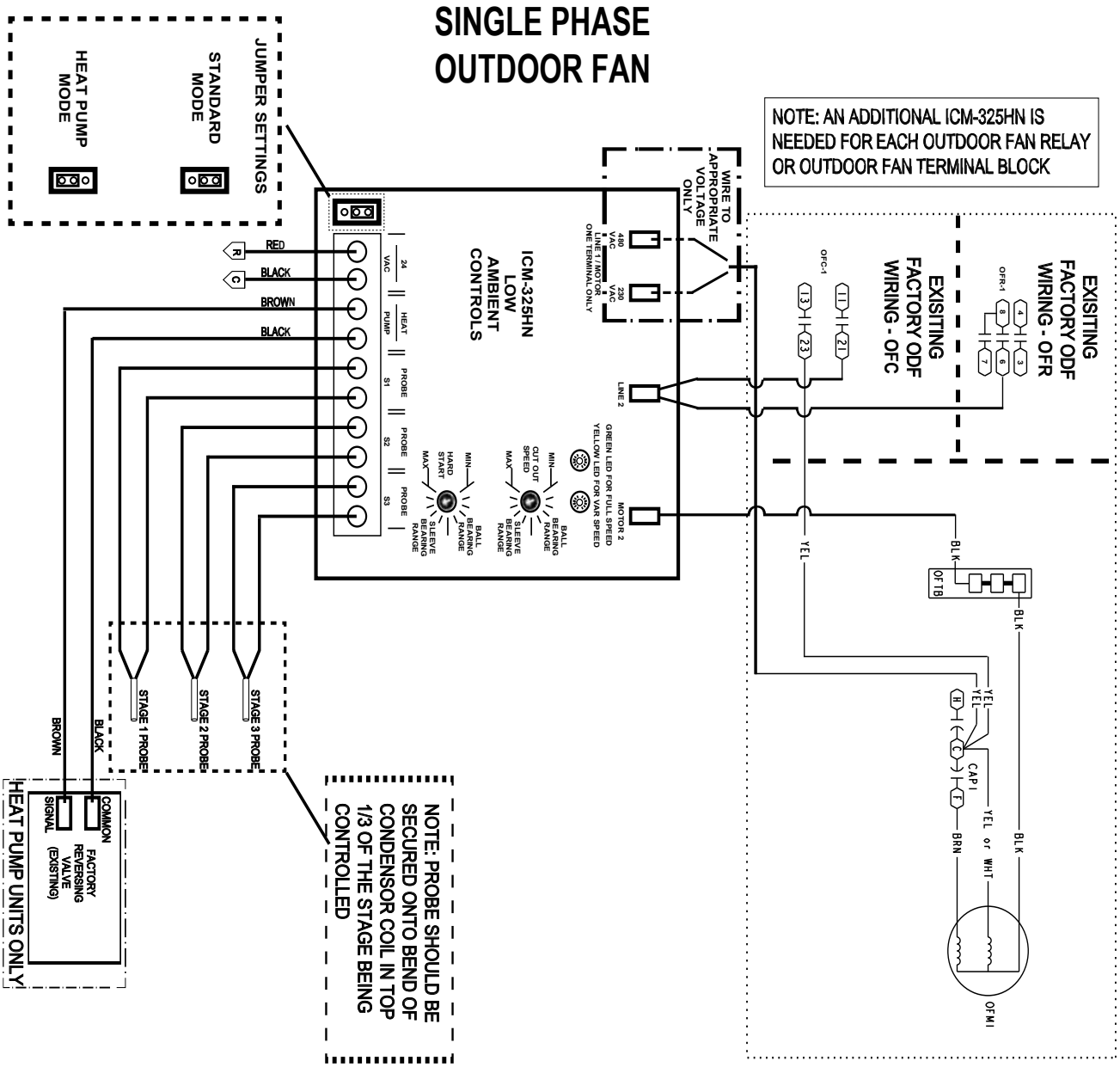

LOW AMBIENT - 3 PHASE FAN

SCH-0034-O

REVISION: V5.0.0.2

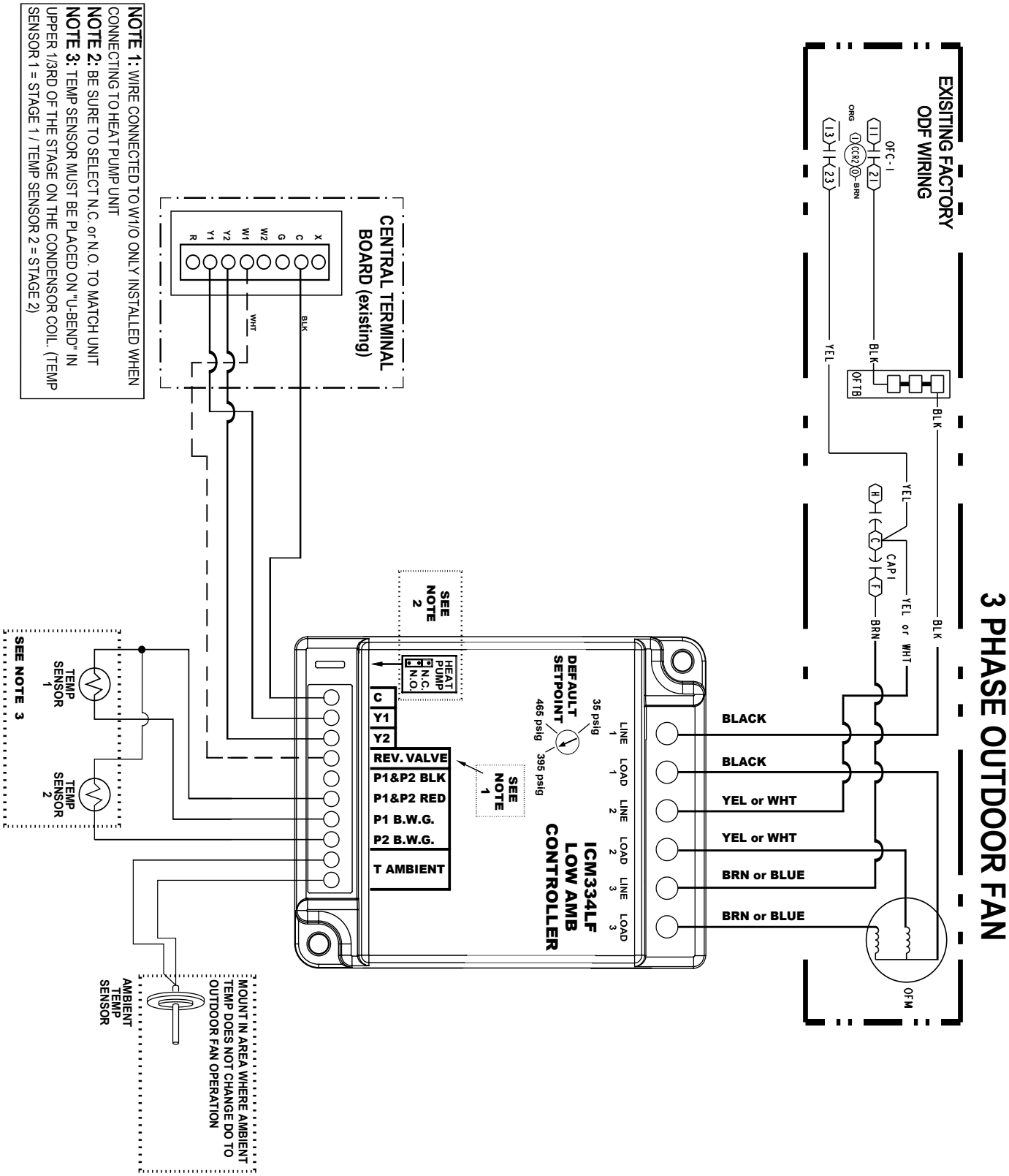

NOTES:

NOTES: